☐ 製品　　☑ ユニット

| No. | 1 / 2 |
|---|---|

| ユーザー名 | 指図番号 | 枝番 | 出図印 | 承認 | 検印 | 担当 |
|---|---|---|---|---|---|---|
| 開発部 | K07A8G7 | 07 | ㈱松井製作所 '20.11.26 SBC | | | |

| 来歴 | | | | | |
|---|---|---|---|---|---|
| 4 | 2020/11/20 | 回転灯・リレー型式変更 | 作成 米田 優也 | 承認 松下 健二郎 | |
| 3 | 2020/02/17 | ・パワーサプライ型式変更<br>・FS2 定格電流値変更 | 作成 米田 優也 | 承認 松下 健二郎 | |
| 2 | 2019/07/02 | ・アース加工位置変更 | 作成 米田 優也 | 承認 松下 健二郎 | |
| 1 | 2018/08/27 | ・ブザー型式変更<br>・400V級インバータ型式変更<br>・アース追加 | 作成 米田 優也 | 承認 松下 健二郎 | |

| 納 期 | 取扱説明書 |
|---|---|
| | |

| 塗装 | | | | | | |
|---|---|---|---|---|---|---|
| M | ☐ AN-80 | ☐ DIC-547（旧色） | ☐ 日塗工D22-80X（安全色） | ☐ 日塗工D22-80X（梯子手摺） | 指定色：本体 ＿＿＿ | 安全色 ＿＿＿ 梯子手摺 ＿＿＿ |
| E | 制御盤外面色 ＿＿＿ | 制御盤内面色 ＿＿＿ | リレー板色 ＿＿＿ | ☐ 艶有り | ☐ 半艶 | |

盤内配線色　☐ 新JIS　☐ 旧マツイ標準　☐ ユーザ指定　☑ 標準機仕様

| 機種ｺｰﾄﾞ | 700201 | 名称 | 制御盤 | 作成年月 | 仕上げ及び製図規定 |
|---|---|---|---|---|---|
| 図面番号 | D18307 | 型式 | | 2016/10/21 | 図面指示以外のものはMST-536加工標準,MST-541製図規定及び241-003製品検査手順(基準)を適用し、不足分についてはJIS規格を適用する。また、動的確認に関しては、妥当性確認チェックリストの内容を適用する。 |
| 担　当 | 米田 優也 | 承認 | 山下 宰司 | 電源電圧 ☐ 50Hz ☐ 60Hz 操作電圧 | |

| 図面番号 | ｻｲｽﾞ | 分類ｺｰﾄﾞ | 種 | 名 称 型 式 | 単数 | 製作数 | 備考 | 改訂 |
|---|---|---|---|---|---|---|---|---|
| D18307 | A3 | 700201 | ユ | 制御盤 | 1 | 1 | | 4 |
| B19004 | A3 | | | 部品表1 MJ5-i-150...650 | 1 | 1 | | 8 |
| B29372 | A3 | | | 部品表2 MJ5-i | 1 | 1 | | 12 |
| B19738 | A3縦 | | | 回路図 1 MJ5-i | 1 | 1 | | 5 |
| B34064 | A3縦 | | | 定格値 MJ5-i | 1 | 1 | | 2 |
| B36996 | A3縦 | | | 定格値 MJ5-i-U | 1 | 1 | | |
| B19008 | A3縦 | | | 回路図 2 MJ5-i | 1 | 1 | | 7 |
| B19009 | A3縦 | | | 回路図 3 (04) MJ5-i-150~650(-1500) | 1 | 1 | | 5 |
| B19010 | A3縦 | | | 回路図 4 (05) MJ5-i-150~650(-1500) | 1 | 1 | | |
| B19011 | A3縦 | | | 回路図 5 (06) MJ5-i-150~650(-1500) | 1 | 1 | | 3 |
| B19012 | A3縦 | | | 回路図 6 MJ5-i | 1 | 1 | | 3 |
| B32108 | A3 | | | 回路図 7 (08 レベルスイッチ) | 1 | 1 | | 2 |
| B19013 | A3縦 | | | 回路図 8 (09) MJ5-i-150~650(-1500) | 1 | 1 | | 3 |
| B19014 | A3縦 | | | 回路図9 MJ5-i | 1 | 1 | | |
| D18308 | A3 | | | 制御ボックス | 1 | 1 | | 1 |
| B23396 | A3 | | | 制御盤扉 | 1 | 1 | | |
| B46686 | A4 | | | 上下ヒンジ | 1 | 1 | | |
| B19019 | A4 | | | リレー板 MJ5-i | 1 | 1 | | 7 |
| B32038 | A4 | | | レール取付金具 | 1 | 1 | | |
| | | | | | | | | |

| 図面番号 | ｻｲｽﾞ | 分類ｺｰﾄﾞ | 種 | 名 称 型 式 | 単数 | 製作数 | 備考 | 改訂 |
|---|---|---|---|---|---|---|---|---|
| B31478 | A3 | 700201 | | オプション追加工図 MJ5-i | 1 | 1 | | 5 |
| 844369 | A4 | | | 露点計取付枠 MJ3 | 1 | 1 | | 1 |
| B15073 | A4 | | | DPMブラケット MJ5-i | 1 | 1 | | 1 |
| B72173 | A3 | | | NO.3-5方向回路図 MJ5-i | 1 | 1 | | 1 |
| B92385 | A3 | | | 材料減回路 | 1 | 1 | | |
| D20622 | A3 | | | 旧パネルブラケット | 1 | 1 | | |

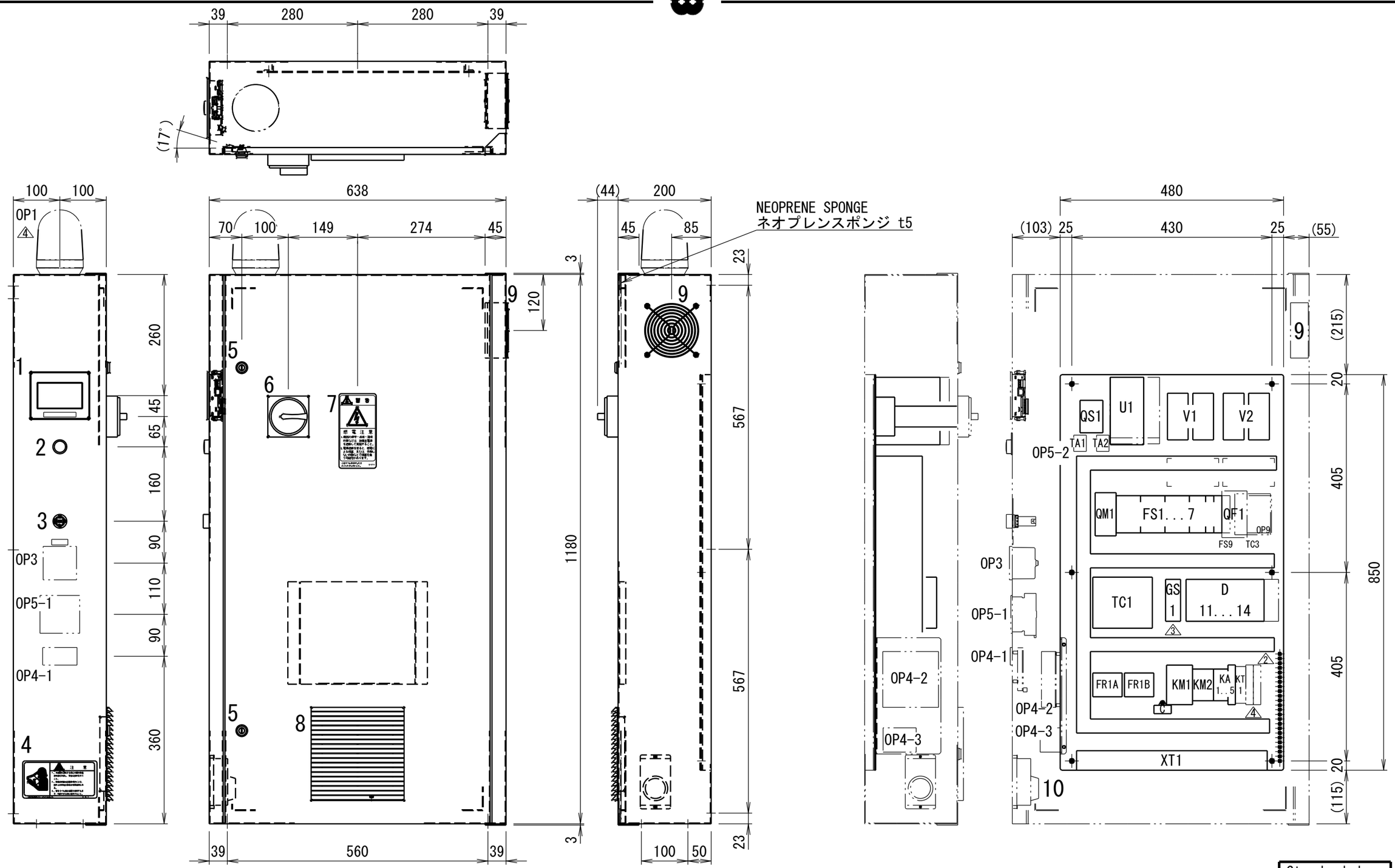


XT1

| NE | 3T1 | 3T3 | 0 | 0 | 2 | 4 | P1 | P1 | P1 | P1 | N1 | N1 | N1 | N1 | N1 | P2 | P2 | P2 | P2 | 5 | 6 | 8 | 9 | 10 | 12 | 006 | 007 | 008 | 009 | 010 | 011 | 012 | 013 | 014 | 015 | 100 | 101 | 102 | 103 | 104 | 105 | 107 | SP | 109 | 110 | 111 | 112 | 113 | 114 | 115 | 205 | 206 | 207 | 208 | 209 | 210 | 211 | 212 | 213 | 214 | 215 | 300 | 304 | 307 | 308 | 309 | 310 | 311 | 312 | 313 | 314 | 315 | EX1 | EX2 |
|---|---|---

| | ITEM NO. | | DESCRIPTION | REQ.D | TYPE | MANUFACTURE |
|---|---|---|---|---|---|---|
| △6 | 1 | D2 | ~~PROGRAMMABLE TERMINAL~~<br>~~プログラマブルターミナル~~ | ~~1~~<br>~~1~~ | ~~NV4W-MG21~~<br>~~NV-BAT01~~ | ~~OMRON~~<br>~~オムロン~~ |
| △6 | | | PROGRAMMABLE DISPLAY<br>プログラマブル表示器 | 1 | HG1G-4VT22TF-S | IDEC |
| | 2 | SB1<br>HL1 | ILLUMINATED PUSHBUTTON SWITCH<br>照光式押しボタンスイッチ | 1<br>1 | AR22F0L-20E3W<br>⏻ | FUJI ELECTRIC<br>富士電機 |
| △7 | 3 | HA1 | BUZZER<br>ブザー | 1 | AD16-22M/k23 | APT ELEC. |
| | | | BUZZER<br>ブザー | 1 | (DR22B5-EB) | (FUJI ELECTRIC)<br>(富士電機) |
| | 4 | | CAUTION LABEL<br>警告ラベル「取扱注意」 | 1 | 6-15-2 | MATSUI<br>マツイ |
| | 5 | | SCREWDRIVER LOCK<br>ロック付ドライバー錠 | 2 | C-286-1 | TAKIGEN<br>タキゲン |
| △5 | 6 | QS1 | MAIN SWITCH<br>ディスコネクトスイッチ | 1 | P1-32/V/SVB *1*2<br>P3-63/V/SVB *3 | EATON<br>イートン |
| △5 | | | INTERLOCK EXTENSION<br>延長サポート | 3 | ZVV-T0 *1*2<br>ZVV-P3 *3 | EATON<br>イートン |
| △5 | | | SHAFT EXTENSION<br>延長シャフト | 3 | ZAV-T0 *1*2<br>ZAV-P3 *3 | EATON<br>イートン |
| | 7 | | CAUTION LABEL<br>警告ラベル「感電注意」 | 1 | 5-17-1 | MATSUI<br>マツイ |
| | 8 | | LOUVER<br>ルーバー | 1 | FE-460-1 | TAKIGEN<br>タキゲン |
| | | | FILTER<br>フィルタ | 1 | FE-460-1-F3 | TAKIGEN<br>タキゲン |
| | 9 | EV1 | AC AXIAL FANS<br>AC軸流ファン | 1<br>1 | ~~ASEN104519~~<br>R87F-A1A15HP<br>R87F-PC-20 | ~~PANASONIC~~<br>OMRON/オムロン |
| | | | FINGER GUARDS<br>フィンガーガード | 2 | ~~ASFN18001~~<br>R87F-FG120 | ~~PANASONIC~~<br>OMRON/オムロン |
| | 10 | ST1 | THERMOSTAT<br>サーモスタット | 1 | TR711 | MATSUI<br>マツイ |
| △5 | 11 | FS1 | MINIATURE CIRCUIT-BREAKER<br>ミニチュアサーキットブレーカ | 1 | REFER TO *A<br>後述 *A | EATON<br>イートン |
| △5 | 12 | KM1 | CONTACTOR<br>コンタクタ | 1 | DILM7-10C(24VDC) *1<br>DILM17-10C(RDC24) *2<br>DILM25-10C(RDC24) *3 | EATON<br>イートン |
| | | | | | [DILM7-10(24VDC) *1]<br>[DILM17-10(RDC24) *2]<br>[DILM25-10(RDC24) *3] | |
| △5 | | | AUXILIARY CONTACT MODULE<br>補助接点ユニット | 1 | ~~DILA-XHI20~~<br>DILAC-XHI40 | EATON<br>イートン |
| △5 | 13 | QM1 | MOTOR-PROTECTIVE CIRCUIT-BREAKER<br>モータブレーカ | 1<br>1 | REFER TO *B<br>後述 *B | EATON<br>イートン |
| △5 | | | STANDARD AUXILIARY CONTACT<br>標準補助接点 | 1 | NHI11-PKZ0 | EATON<br>イートン |
| △5 | 14 | KM2 | CONTACTOR<br>コンタクタ | 1 | REFER TO *B<br>後述 *B | EATON<br>イートン |

| | ITEM NO. | | DESCRIPTION | REQ.D | TYPE | MANUFACTURE |
|---|---|---|---|---|---|---|
| △5 | 15 | FS3 | MINIATURE CIRCUIT-BREAKER<br>ミニチュアサーキットブレーカ | 1 | REFER TO *C OR *D<br>後述 *C, *D | EATON<br>イートン |
| △5 | 16 | FS4 | MINIATURE CIRCUIT-BREAKER<br>ミニチュアサーキットブレーカ | 1 | REFER TO *E OR *F<br>後述 *E, *F | EATON<br>イートン |
| | 17 | KA1...4 | TERMINAL RELAY/ターミナルリレー<br>SHORT BAR/ショートバー | 1<br>2 | G6D-F4B DC24V<br>G6D-4-SB | OMRON<br>オムロン |
| | 18 | KA5 | SOLID STATE RELAY/SSR<br>SOCKET/ソケット | 1<br>1 | G3R-OA202SLN DC5-24<br>P2RF-05-E | OMRON<br>オムロン |
| | 19 | U1 | INDUSTRIAL INVERTER<br>インバータ | 1 | REFER TO *G<br>後述 *G | TOSHIBA<br>東芝シュネデール |
| | 20 | FR1A | THERMAL OVERLOAD RELAY<br>サーマルリレー | 1 | REFER TO *H<br>後述 *H | MITSUBISHI<br>三菱電機 |
| | 21 | FR1B | THERMAL OVERLOAD RELAY<br>サーマルリレー | 1 | REFER TO *I<br>後述 *I | MITSUBISHI<br>三菱電機 |
| | 22 | V1 | ~~SOLID STATE CONTACTOR~~<br>~~ソリッドステートコンタクタ~~ | ~~1~~ | ~~US-N20 *1 *2~~<br>~~US-N30 *3~~ | ~~MITSUBISHI~~<br>~~三菱電機~~ |
| | | | SOLID STATE RELAY<br>ソリッドステートリレー | 2 | REFER TO *L<br>後述 *L | OMRON<br>オムロン |
| | 23 | V2 | ~~SOLID STATE CONTACTOR~~<br>~~ソリッドステートコンタクタ~~ | ~~1~~ | ~~US-N20~~ | ~~MITSUBISHI~~<br>~~三菱電機~~ |
| | | | SOLID STATE RELAY<br>ソリッドステートリレー | 2 | REFER TO *M<br>後述 *M | OMRON<br>オムロン |
| △5 | 24 | FS5 | MINIATURE CIRCUIT-BREAKER<br>ミニチュアサーキットブレーカ | 1 | REFER TO *J<br>後述 *J | EATON<br>イートン |
| | 25 | TC1 | TRANSFORMER<br>トランス | 1 | REFER TO *K<br>後述 *K | WUXI NO.5<br>MACHINETOOL |
| △5 | 26 | FS6 | MINIATURE CIRCUIT-BREAKER<br>ミニチュアサーキットブレーカ | 1 | ~~FAZ-D3/1~~<br>PL9-D3/1<br>(FAZ-C3/1) | EATON<br>イートン |
| | 27 | C | CAPACITOR<br>コンデンサ | 1 | 250WV 6.0μF | SHI<br>住友重機械 |
| △8 | 28 | GS1 | SWITCHING POWER SUPPLY<br>スイッチングパワーサプライ | 1 | ~~DR-75-24~~<br>S8VK-C06024 | ~~MEAN WELL~~<br>OMRON |
| △5 | 29 | FS7 | MINIATURE CIRCUIT-BREAKER<br>ミニチュアサーキットブレーカ | 1 | PL9-C3/1<br>(FAZ-C3/1) | EATON<br>イートン |
| | 30 | D11 | DC POWER SUPPLY UNIT<br>電源ユニット | 1 | CJ1W-PD022 | OMRON<br>オムロン |
| | 31 | D12 | CPU UNIT<br>CPUユニット | 1 | ~~CJ2M-CPU11~~<br>CJ2M-CPU12 | OMRON<br>オムロン |
| | 32 | D13 | I/O UNIT<br>入出力ユニット | 1 | CJ1W-MD261 | OMRON<br>オムロン |
| | 33 | D14 | TEMPERATURE CONTROL UNIT<br>温度調節ユニット | 1 | CJ1W-TC001 | OMRON<br>オムロン |
| | 34 | XT1 | TERMINAL BLOCK<br>端子台 | | 2002-1301 | WAGO<br>ワゴ |
| | | | | | | |

*1: MJ5-i-150
*2: MJ5-i-350
*3: MJ5-i-650

Standard dwg.
標準図

| REVISION | | | | | |
|---|---|---|---|---|---|
| △8 | FEB/17/2020 | Power supply model change<br>パワーサプライ型式変更 | Y. YONEDA | K. MATSUSHITA | |
| △7 | AUG/27/2018 | Buzzer model change<br>ブザー型式変更 | Y. YONEDA | K. MATSUSHITA | |
| △6 | OCT/21/2016 | Change touch screen model<br>タッチパネル型式変更 | Y. YONEDA | S. YAMASHITA | |
| △5 | OCT/15/2015 | CHANGE MAKER'S NAME<br>メーカー名変更 | Y. ARAKI | Y. NAKAMURA | |
| MARK | DATE | CONTENTS | CHKD | APPD | |

| | | | |
|---|---|---|---|
| SCALE | — | CODE NO. | |
| APPROVED BY | M. HARU | FORM | |
| DSGND (CHKD) BY | T. ONO — | DATE | JUL/30/2010 |
| DRAWN BY | — | UNIT mm | PLANE TRIGONOMETRY |

| | | | |
|---|---|---|---|
| NAME | | DWG. NO. | B19004 |

MATSUI MFG. CO., LTD.

| | ITEM NO. | | DESCRIPTION | REQ. D | TYPE | MANUFACTURE |
|---|---|---|---|---|---|---|
| 12 | OP1 | HL2 | ROTATING LIGHT<br>回転灯 | (1) | XVR3M04 | SCHNEIDER<br>シュナイダー |
| 12 | OP1<br>OP2 | KA6 | RELAY<br>リレー | (1) | G2R-2-SD<br>P2RF-08-E | OMRON<br>オムロン |
| | OP3 | KT0 | DIGITAL TIME SWITCH<br>デジタルタイムスイッチ | (1) | (H5S-WB2D)<br>H5S-WA2D | OMRON<br>オムロン |
| | | | | | | |
| | OP4-1 | P1A | DISPLAY P.C.B.<br>露点温度表示器 | (1) | CODE NO. 27525 | ORION<br>オリオン |
| | OP4-2 | P1B | SIGNEL EXCHAGE P.C.B.<br>信号変換基板 | (1) | | |
| | OP4-3 | TC2 | TRANSFORMER<br>トランス | (1) | HT-1603 | TOYOZUMI<br>豊澄電源機器 |
| | OP4-4 | | LEGEND PLATE<br>銘板 | (1) | (DEW POINT METER)<br>露点計 | MATSUI<br>マツイ |
| 12 | OP4-5 | KA14 | RELAY<br>リレー | (1) | G2R-2-SD<br>P2RF-08-E | OMRON<br>オムロン |
| | OP4 | P1 | DEW POINT MONITOR<br>露点温度表示器 | (1) | 6392N-115V | NEWPORT<br>SCIENTIFIC |

| | ITEM NO. | | DESCRIPTION | REQ. D | TYPE | MANUFACTURE |
|---|---|---|---|---|---|---|
| | OP5-1 | PJ1 | Eco-POWER METER<br>電力量計 | (1) | KW1M-H<br>AKW1822 | PANASONIC<br>パナソニック |
| | OP5-2 | TA1,2 | DECICATED CT<br>電流センサ | (2) | AKW4801C | PANASONIC<br>パナソニック |
| | OP5-2 | FS2 | MINIATURE CIRCUIT-BREAKER<br>ミニチュアサーキットブレーカ | (1) | PL9-C1/3<br>(FAZ-C1/3) 11 | EATON<br>イートン |
| | OP6 *4 | QF1 | EARTH-LEAKAGE CIRCUIT BREAKER<br>漏電ブレーカ | (1) | NV63-CVF 3P 30A<br>AC100-440V 30mA *1,2<br>NV63-CVF 3P 50A<br>AC100-440V 30mA *3 | MITSUBISHI<br>三菱電機 |
| 9 | ~~OP7~~ | ~~D2~~ | ~~GRAPHIC OPERATION TERMINAL~~<br>~~グラフィックオペレーション~~<br>~~ターミナル~~ | ~~(1)~~ | ~~GT1045-QSBD-C~~<br>~~(GT1045-QSBD)~~ | ~~MITSUBISHI~~<br>~~三菱電機~~ |
| | OP8 | KT1 | POWER OFF-DELAY TIMER<br>電源オフディレータイマ | (1) | ~~H3DE-H-S-AC/DC24V~~<br>H3DK-HBS | OMRON<br>オムロン |
| | OP9-1 *4 | TC3 | TRANSFORMER<br>トランス | (1) | 50VA 380,400,415<br>,440/200,220V | LOCAL ITEM<br>汎用品 |
| | OP9-2 | FS9 | MINIATURE CIRCUIT-BREAKER<br>ミニチュアサーキットブレーカ | (1) | PL9-C1/1<br>(FAZ-C1/1) | EATON<br>イートン |
| | | | | | | |
| | | | | | | |

*1: MJ5-i-150
*2: MJ5-i-350
*3: MJ5-i-650

*4: どちらか一方選択 An either-or choice

| POWER 電源 | | FS1 | | QM1<br>KM2 | FS3 | | FS4 | | U1 | FR1A | FR1B | V1 | V2 | FS5 | TC1 |
|---|---|---|---|---|---|---|---|---|---|---|---|---|---|---|---|
| V | Hz | *A | | *B | *C | *D | *E | *F | *G | *H | *I | *L | *M | *J | *K |
| 200 | 50<br>60 | PL9-C16/3 *1<br>PL9-C25/3 *2<br>PL9-C40/3 *3 | (FAZ-C16/3 *1)<br>(FAZ-C25/3 *2)<br>(FAZ-C40/3 *3) | ~~MSC-D-6.3-M7(24VDC)~~<br>PKZMC0-6.3<br>DILM7-10C(24VDC)<br>[PKZM0-6.3]<br>[DILM7-10(24VDC)] | ~~FAZ-B10/3 *1~~<br>~~FAZ-B16/3 *2~~<br>~~FAZ-B25/3 *3~~<br>PL9-C10/3 *1<br>PL9-C16/3 *2<br>PL9-C25/3 *3 | (FAZ-Z10/3 *1)<br>(FAZ-Z16/3 *2)<br>(FAZ-Z25/3 *3) | ~~FAZ-B6/3 *1~~<br>~~FAZ-B10/3 *2~~<br>~~FAZ-B16/3 *3~~<br>PL9-C6/3 *1<br>PL9-C10/3 *2<br>PL9-C16/3 *3 | (FAZ-Z6/3 *1)<br>(FAZ-Z10/3 *2)<br>(FAZ-Z16/3 *3) | VFS15-2004PM<br>(VFS11-2004PM) *1<br>VFS15-2007PM<br>(VFS11-2007PM) *2<br>VFS15-2015PM<br>(VFS11-2015PM) *3 | TH-T25KP 0.9A *1<br>TH-T25KP 1.7A *2<br>TH-T25KP 5A *3<br>~~UN-CV2055 *1,2,3~~ | TH-T25KP 0.9A *1<br>TH-T25KP 0.9A *2<br>TH-T25KP 1.7A *3<br>~~UN-CV2055 *1,2,3~~ | G3PE-225B<br>DC12-24 *1,2<br>G3PE-235B<br>DC12-24 *3 | G3PE-225B<br>DC12-24 | ~~FAZ-D4/2~~<br>PL9-D4/2<br>(FAZ-S4/2) | 300VA 200/100V<br>300VA 220/100V |
| 380 | 50 | PL9-C10/3 *1<br>PL9-C16/3 *2<br>PL9-C25/3 *3 | (FAZ-C10/3 *1)<br>(FAZ-C16/3 *2)<br>(FAZ-C25/3 *3) | ~~MSC-D-4-M7(24VDC)~~<br>PKZMC0-4<br>DILM7-10C(24VDC)<br>[PKZM0-4]<br>[DILM7-10(24VDC)] | ~~FAZ-B6/3 *1~~<br>~~FAZ-B6/3 *2~~<br>~~FAZ-B16/3 *3~~<br>PL9-C6/3 *1<br>PL9-C6/3 *2<br>PL9-C16/3 *3 | (FAZ-Z6/3 *1)<br>(FAZ-Z6/3 *2)<br>(FAZ-Z16/3 *3) | ~~FAZ-C3/3 *1~~<br>~~FAZ-B6/3 *2~~<br>~~FAZ-B8/3 *3~~<br>PL9-C3/3 *1<br>PL9-C6/3 *2<br>PL9-C10/3 *3 | (FAZ-Z3/3 *1)<br>(FAZ-Z6/3 *2)<br>(FAZ-Z8/3 *3) | 10<br>VFS15-4004PL1<br>(VFS11-4004PL) *1<br>VFS15-4007PL1<br>(VFS11-4007PL) *2<br>VFS15-4015PL1<br>(VFS11-4015PL) *3 | TH-T25KP 0.5A *1<br>TH-T25KP 1.3A *2<br>TH-T25KP 2.5A *3<br>~~UN-CV2055 *1,2,3~~ | TH-T25KP 0.5A *1<br>TH-T25KP 0.5A *2<br>TH-T25KP 1.3A *3<br>~~UN-CV2055 *1,2,3~~ | G3PE-515B<br>DC12-24 *1,2<br>G3PE-525B<br>DC12-24 *3 | G3PE-515B<br>DC12-24 | ~~FAZ-D2/2~~<br>PL9-D2/2<br>(FAZ-S2/2) | 300VA 380/100V |
| 400 | 50 | | | | | | | | | | | | | | 300VA 400/100V |
| 415 | 50 | | | | | | | | | | | | | | 300VA 415/100V |
| 440 | 60 | | | | | | | | | | | | | | 300VA 440/100V |
| 230 | 60 | PL9-C16/3 *1<br>PL9-C25/3 *2<br>PL9-C40/3 *3 | (FAZ-C16/3 *1)<br>(FAZ-C25/3 *2)<br>(FAZ-C40/3 *3) | ~~MSC-D-6.3-M7(24VDC)~~<br>PKZMC0-6.3<br>DILM7-10C(24VDC)<br>[PKZM0-6.3]<br>[DILM7-10(24VDC)] | ~~FAZ-B10/3 *1~~<br>~~FAZ-B10/3 *2~~<br>~~FAZ-B20/3 *3~~<br>PL9-C10/3 *1<br>PL9-C10/3 *2<br>PL9-C20/3 *3 | (FAZ-Z10/3 *1)<br>(FAZ-Z10/3 *2)<br>(FAZ-Z20/3 *3) | ~~FAZ-B6/3 *1~~<br>~~FAZ-B10/3 *2~~<br>~~FAZ-B16/3 *3~~<br>PL9-C6/3 *1<br>PL9-C10/3 *2<br>PL9-C16/3 *3 | (FAZ-Z6/3 *1)<br>(FAZ-Z10/3 *2)<br>(FAZ-Z16/3 *3) | VFS15-2004PM<br>(VFS11-2004PM) *1<br>VFS15-2007PM<br>(VFS11-2007PM) *2<br>VFS15-2015PM<br>(VFS11-2015PM) *3 | TH-T25KP 0.9A *1<br>TH-T25KP 2.1A *2<br>TH-T25KP 5A *3<br>~~UN-CV2055 *1,2,3~~ | TH-T25KP 0.9A *1<br>TH-T25KP 0.9A *2<br>TH-T25KP 2.1A *3<br>~~UN-CV2055 *1,2,3~~ | G3PE-225B<br>DC12-24 *1,2<br>G3PE-235B<br>DC12-24 *3 | G3PE-225B<br>DC12-24 | ~~FAZ-D4/2~~<br>PL9-D4/2<br>(FAZ-S4/2) | 300VA 460,230/100V |
| 240 | | | | | | | | | | | | | | | |
| 460 | | PL9-C10/3 *1<br>PL9-C13/3 *2<br>PL9-C25/3 *3 | (FAZ-C8/3 *1)<br>(FAZ-C13/3 *2)<br>(FAZ-C25/3 *3) | ~~MSC-D-4-M7(24VDC)~~<br>PKZMC0-4<br>DILM7-10C(24VDC)<br>[PKZM0-4]<br>[DILM7-10(24VDC)] | ~~FAZ-B6/3 *1~~<br>~~FAZ-B6/3 *2~~<br>~~FAZ-B16/3 *3~~<br>PL9-C6/3 *1<br>PL9-C6/3 *2<br>PL9-C16/3 *3 | (FAZ-Z6/3 *1)<br>(FAZ-Z6/3 *2)<br>(FAZ-Z16/3 *3) | ~~FAZ-C3/3 *1~~<br>~~FAZ-B6/3 *2~~<br>~~FAZ-B8/3 *3~~<br>PL9-C3/3 *1<br>PL9-C6/3 *2<br>PL9-C10/3 *3 | (FAZ-Z3/3 *1)<br>(FAZ-Z6/3 *2)<br>(FAZ-Z8/3 *3) | VFS15-4004PL1<br>(VFS11-4004PL) *1<br>VFS15-4007PL1<br>(VFS11-4007PL) *2<br>VFS15-4015PL1<br>(VFS11-4015PL) *3 | TH-T25KP 0.5A *1<br>TH-T25KP 0.9A *2<br>TH-T25KP 2.1A *3<br>~~UN-CV2055 *1,2,3~~ | TH-T25KP 0.5A *1<br>TH-T25KP 0.5A *1<br>TH-T25KP 0.9A *3<br>~~UN-CV2055 *1,2,3~~ | G3PE-515B<br>DC12-24 *1,2<br>G3PE-525B<br>DC12-24 *3 | G3PE-515B<br>DC12-24 | ~~FAZ-D2/2~~<br>PL9-D2/2<br>(FAZ-S2/2) | |
| 480 | | | | | | | | | | | | | | | |

10

Standard dwg.
標準図

| REVISION MARK | DATE | CONTENTS | CHKD | APPD |
|---|---|---|---|---|
| 12 | NOV/20/2020 | Rotating light,relay model change<br>回転灯・リレー型式変更 | Y. YONEDA | K. MATSUSHITA |
| 11 | AUG/22/2019 | Rated current value change<br>定格電流値変更 | Y. YONEDA | K. MATSUSHITA |
| 10 | AUG/27/2018 | Change of 400V class inverter type<br>400V級インバータ型式変更 | Y. YONEDA | K. MATSUSHITA |
| 9 | OCT/21/2016 | OP7:Abolish color touch screen option<br>OP7:カラータッチパネルオプション廃止 | Y. YONEDA | S. YAMASHITA |

| | | | | | |
|---|---|---|---|---|---|
| SCALE | — | CODE NO. | | | |
| APPROVED BY | | M. HARU | FORM | | |
| DSGND (CHKD) BY | | T. ONO | — | DATE | 2011/4/7 |
| DRAWN BY | | — | | UNIT mm | PLANE TRIGONOMETRY |

| | | | |
|---|---|---|---|
| NAME | | DWG. NO. | B29372 |

MATSUI MFG. CO., LTD.

| | 200, 220V | 380. . . 440V | 230, 240V | 460, 480V |
|---|---|---|---|---|
| MJ5-i-150 | 30A | 15A | 20A | 15A |
| MJ5-i-350 | 30A | 15A | 30A | 15A |
| MJ5-i-650 | 50A | 30A | 40A | 25A |

3～
50/60Hz
RECOMM.
推奨遮断電流

LIMIT OF EQUIPMENT
機器境界

| | 200, 220V | 380. . . 440V | 230, 240V | 460, 480V |
|---|---|---|---|---|
| MJ5-i-150 | 6(8)mm² | 2.5(2)mm² | 2.5(3.5)mm² | 2.5(2)mm² |
| MJ5-i-350 | 6(8)mm² | 2.5(2)mm² | 6(8)mm² | 2.5(2)mm² |
| MJ5-i-650 | 16(14)mm² | 6(8)mm² | 10(14)mm² | 4(5.5)mm² |

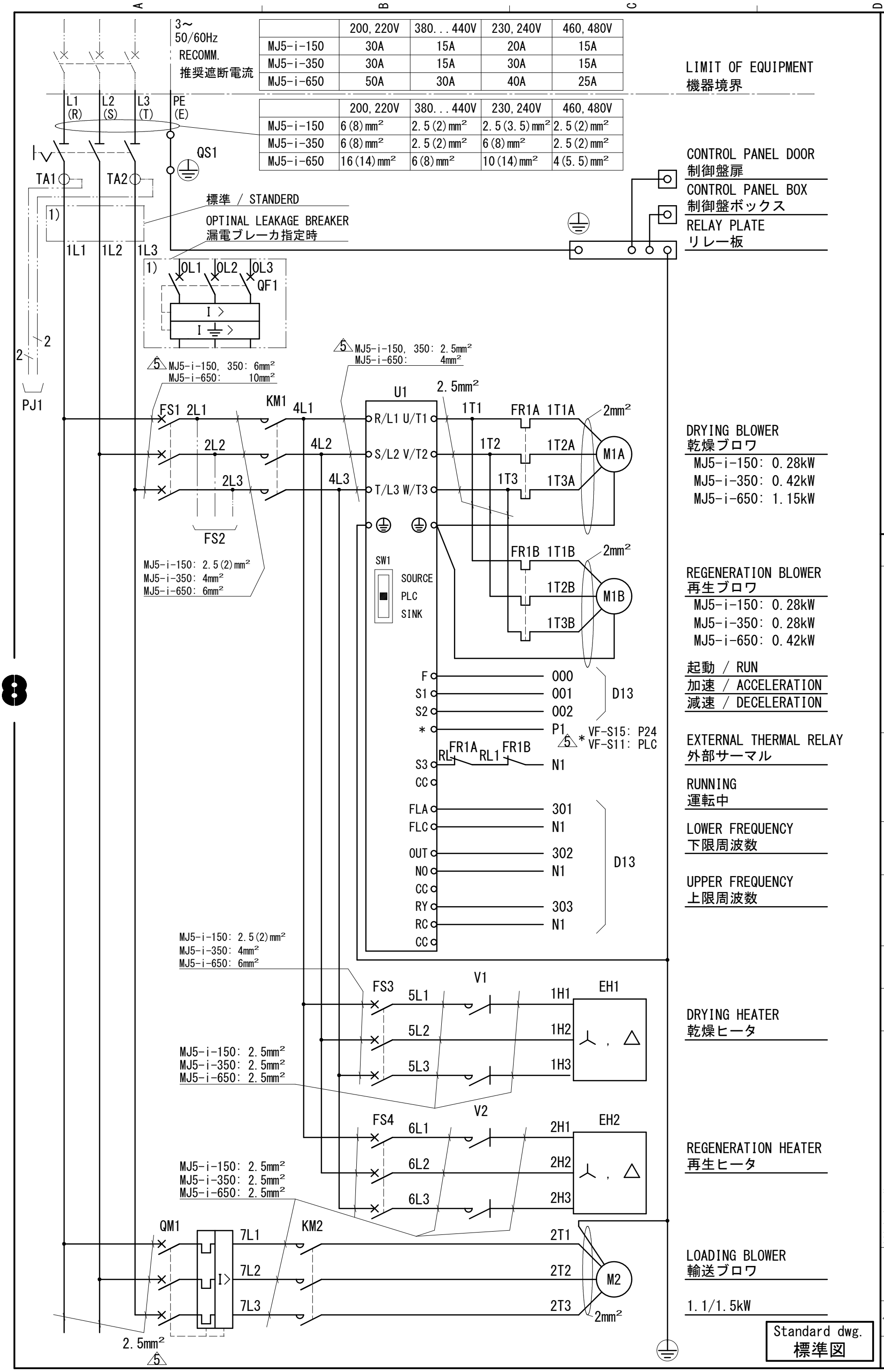


| MARK | DATE | REVISION |
|---|---|---|
| 5 | 2016/11/29 | Added wire diameter 電線径追記 |
| 4 | 2012/11/12 | Added the terminal "P24" to "U1" of "VF-S15" type VF-S15型インバータU1に端子P24を追加 |
| 3 | 2012/4/12 | REMOVE REVERSE PHASE DETECTION "FS2" AND "KAO". 逆相検知回路FS2、KAOを削除 |
| 2 | 2012/3/18 | FS2 AND KAO CHANGED TO OPTION. 逆相検知をオプションに変更 |

| | | | |
|---|---|---|---|
| CONTENTS | Y. YONEDA | S. YAMASHITA | |
| CHKD | T, ONO | M. HARU | |
| APPD | T, ONO | M. HARU | |
| DRAWN BY | T, ONO | M. HARU | |
| DSGND(CHKD)BY | T. ONO | | |
| APPROVED BY | M. HARU | | |
| SCALE | — | CODE NO. | — |
| FORM | | | |
| DATE | AUG 27/2010 | | |
| UNIT mm | PLANE TRIGONOMETRY | | |
| NAME | MATSUI MFG. CO., LTD. | | |
| DWG. No. | B19738 | | |

8

MJ5-i-150

| POWER 電源 | | QF1 | | FS1 | FS3 | FS4 | OVER CURRENT 整定電流 | | | EH1 | | | EH2 | | |
|---|---|---|---|---|---|---|---|---|---|---|---|---|---|---|---|
| | | | | | | | FR1A | FR1B | QM1 | | | | | | |
| V | Hz | A | mA | A | A | A | A | A | A | kW | A | | kW | A | |
| 200 | 50<br>60 | 30 | 30 | 16 | 10 | 6 | 1.0 | 1.0 | 4.8<br>6.2 | 2.1 | 6.1 | Y | 1.0 | 2.9 | Y |
| 220 | 60 | 30 | 30 | 16 | 10 | 6 | 0.94 | 0.94 | 5.8 | 2.5 | 6.7 | Y | 1.2 | 3.2 | Y |
| 380 | 50 | 15 | 30 | 10 | 6 | 3 | 0.55 | 0.55 | 2.8 | 2.1 | 3.2 | Y | 1.0 | 1.5 | Y |
| 400 | 50 | 15 | 30 | 10 | 6 | 3 | 0.53 | 0.53 | 2.9 | 2.32 | 3.3 | Y | 1.1 | 1.6 | Y |
| 415 | 50 | 15 | 30 | 10 | 6 | 3 | 0.53 | 0.53 | 3.1 | 2.5 | 3.5 | Y | 1.2 | 1.7 | Y |
| 440 | 60 | 15 | 30 | 10 | 6 | 3 | 0.53 | 0.53 | 3.1 | 2.1 | 2.8 | Y | 1.0 | 1.3 | Y |

MJ5-i-350

| POWER 電源 | | QF1 | | FS1 | FS3 | FS4 | OVER CURRENT 整定電流 | | | EH1 | | | EH2 | | |
|---|---|---|---|---|---|---|---|---|---|---|---|---|---|---|---|
| | | | | | | | FR1A | FR1B | QM1 | | | | | | |
| V | Hz | A | mA | A | A | A | A | A | A | kW | A | | kW | A | |
| 200 | 50<br>60 | 30 | 30 | 25 | 16 | 10 | 1.9 | 1.0 | 4.8<br>6.2 | 2.4 | 6.9 | Y | 2.1 | 6.1 | Y |
| 220 | 60 | 30 | 30 | 25 | 16 | 10 | 1.9 | 0.94 | 5.8 | 2.9 | 7.6 | Y | 2.5 | 6.7 | Y |
| 380 | 50 | 15 | 30 | 16 | 6 | 6 | 1.1 | 0.55 | 2.8 | 2.4 | 3.6 | Y | 2.1 | 3.2 | Y |
| 400 | 50 | 15 | 30 | 16 | 6 | 6 | 1.1 | 0.53 | 2.9 | 2.7 | 3.8 | Y | 2.3 | 3.3 | Y |
| 415 | 50 | 15 | 30 | 16 | 6 | 6 | 1.1 | 0.53 | 3.1 | 2.9 | 4.0 | Y | 2.5 | 3.5 | Y |
| 440 | 60 | 15 | 30 | 16 | 6 | 6 | 1.2 | 0.53 | 3.1 | 2.4 | 3.8 | Y | 2.1 | 2.8 | Y |

MJ5-i-650

| POWER 電源 | | QF1 | | FS1 | FS3 | FS4 | OVER CURRENT 整定電流 | | | EH1 | | | EH2 | | |
|---|---|---|---|---|---|---|---|---|---|---|---|---|---|---|---|
| | | | | | | | FR1A | FR1B | QM1 | | | | | | |
| V | Hz | A | mA | A | A | A | A | A | A | kW | A | | kW | A | |
| 200 | 50<br>60 | 50 | 30 | 40 | 25 | 16 | 5.0 | 1.9 | 4.8<br>6.2 | 5.4 | 15.6 | Y | 3.1 | 9.0 | Y |
| 220 | 60 | 50 | 30 | 40 | 25 | 16 | 4.6 | 1.9 | 5.8 | 6.5 | 17.1 | Y | 3.8 | 9.8 | Y |
| 380 | 50 | 30 | 30 | 25 | 16 | 10<br>( 8) | 2.6 | 1.1 | 2.8 | 5.4 | 8.2 | Y | 3.1 | 4.7 | Y |
| 400 | 50 | 30 | 30 | 25 | 16 | 10<br>( 8) | 2.6 | 1.1 | 2.9 | 6.0 | 8.6 | Y | 3.4 | 5.0 | Y |
| 415 | 50 | 30 | 30 | 25 | 16 | 10<br>( 8) | 2.5 | 1.1 | 3.1 | 6.4 | 8.9 | Y | 3.7 | 5.1 | Y |
| 440 | 60 | 30 | 30 | 25 | 16 | 10<br>( 8) | 2.5 | 1.2 | 3.1 | 5.4 | 7.1 | Y | 3.1 | 4.1 | Y |

Standard dwg.
標準図

| REVISION | | | |
|---|---|---|---|
| MARK | DATE | CONTENTS | CHKD / APPD |
| 1 | 2012/3/18 | FS2 AND KAO CHANGED TO OPTION.<br>逆相検知をオプションに変更 | T, ONO / M. HARU |
| 2 | 2012/4/26 | FS4 RATED CURRENT<br>FS4 電流値 | T, ONO / M. HARU |

| | | | |
|---|---|---|---|
| DRAWN BY | DSGND(CHKD)BY | APPROVED BY | M. HARU |
| DATE | AUG/1/2011 | FORM | |
| UNIT mm | PLANE TRIGONOMETRY | | |
| — | T. ONO — | CODE NO. | — |
| | | SCALE | — |

MATSUI MFG. CO., LTD.

NAME

DWG. No. B34064

MJ5-i-150-U

| POWER 電源 | | QF1 | | FS1 | FS3 | FS4 | OVER CURRENT 整定電流 | | | EH1 | | | EH2 | | |
|---|---|---|---|---|---|---|---|---|---|---|---|---|---|---|---|
| | | | | | | | FR1A | FR1B | QM1 | | | | | | |
| V | Hz | A | | A | A | A | A | A | A | kW | A | | kW | A | |
| 230 | 60 | 20 | | 16 | 10 | 6 | 1.0 | 1.0 | 5.3 | 2.3 | 5.8 | Δ | 1.1 | 2.8 | Δ |
| 240 | 60 | 20 | | 16 | 10 | 6 | 1.0 | 1.0 | 5.8 | 2.5 | 6.0 | Δ | 1.2 | 2.9 | Δ |
| 460 | 60 | 15 | | 10 ( 8) | 6 | 3 | 0.47 | 0.47 | 2.7 | 2.3 | 2.9 | Y | 1.1 | 1.4 | Y |
| 480 | 60 | 15 | | 10 ( 8) | 6 | 3 | 0.6 | 0.6 | 2.9 | 2.5 | 3.0 | Y | 1.2 | 1.4 | Y |

MJ5-i-350-U

| POWER 電源 | | QF1 | | FS1 | FS3 | FS4 | OVER CURRENT 整定電流 | | | EH1 | | | EH2 | | |
|---|---|---|---|---|---|---|---|---|---|---|---|---|---|---|---|
| | | | | | | | FR1A | FR1B | QM1 | | | | | | |
| V | Hz | A | | A | A | A | A | A | A | kW | A | | kW | A | |
| 230 | 60 | 30 | | 25 | 10 | 10 | 2.0 | 1.0 | 5.3 | 2.6 | 6.6 | Δ | 2.3 | 5.8 | Δ |
| 240 | 60 | 30 | | 25 | 10 | 10 | 2.0 | 1.0 | 5.3 | 2.9 | 6.9 | Δ | 2.5 | 6.0 | Δ |
| 460 | 60 | 15 | | 13 | 6 | 6 | 1.0 | 0.47 | 2.7 | 2.6 | 3.3 | Y | 2.3 | 2.9 | Y |
| 480 | 60 | 15 | | 13 | 6 | 6 | 1.0 | 0.47 | 2.7 | 2.9 | 3.4 | Y | 2.5 | 3.0 | Y |

MJ5-i-650-U

| POWER 電源 | | QF1 | | FS1 | FS3 | FS4 | OVER CURRENT 整定電流 | | | EH1 | | | EH2 | | |
|---|---|---|---|---|---|---|---|---|---|---|---|---|---|---|---|
| | | | | | | | FR1A | FR1B | QM1 | | | | | | |
| V | Hz | A | | A | A | A | A | A | A | kW | A | | kW | A | |
| 230 | 60 | 40 | | 40 | 20 | 16 | 4.5 | 2.0 | 5.3 | 5.4 | 13.6 | Y | 3.1 | 7.8 | Y |
| 240 | 60 | 40 | | 40 | 20 | 16 | 4.5 | 2.0 | 5.3 | 5.9 | 14.2 | Y | 3.4 | 8.1 | Y |
| 460 | 60 | 25 | | 25 | 16 | 8 | 2.3 | 1.0 | 2.7 | 5.9 | 7.4 | Y | 3.4 | 4.3 | Y |
| 480 | 60 | 25 | | 25 | 16 | 8 | 2.3 | 1.0 | 2.7 | 6.4 | 7.7 | Y | 3.7 | 4.4 | Y |

Standard dwg.
標準図

| | | | | | |
|---|---|---|---|---|---|
| DWG. NO. | B36996 | | | | |
| NAME | MATSUI MFG. CO., LTD. | | | | |
| | | FORM | DATE | AUG/1/2011 | PLANE TRIGONOMETRY |
| CODE NO. | — | M.HARU | — | UNIT mm | — |
| SCALE | — | APPROVED BY | T.ONO | DSGND(CHKD)BY | DRAWN BY |
| | | | | | APPD |
| | | | | | CHKD |
| | | | | | CONTENTS |
| | | | | | DATE |
| | | | | | MARK |
| | | | | | REVISION |

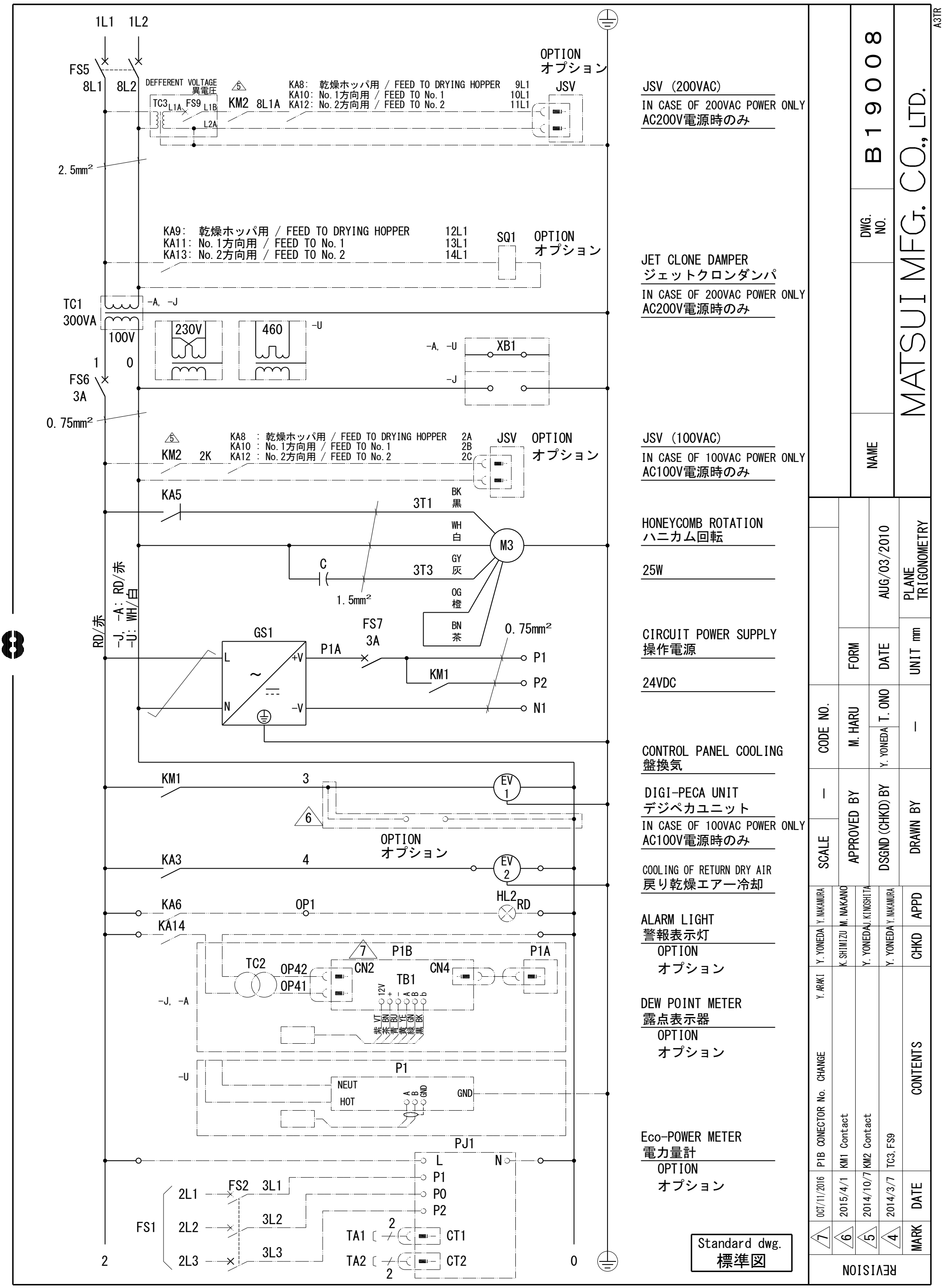
1L1 1L2
FS5
8L1 8L2
DEFFERENT VOLTAGE
異電圧
TC3 L1A FS9 L1B L2A
KM2 8L1A
KA8: 乾燥ホッパ用 / FEED TO DRYING HOPPER 9L1
KA10: No.1方向用 / FEED TO No.1 10L1
KA12: No.2方向用 / FEED TO No.2 11L1
OPTION
オプション
JSV
2.5mm²
KA9: 乾燥ホッパ用 / FEED TO DRYING HOPPER 12L1
KA11: No.1方向用 / FEED TO No.1 13L1
KA13: No.2方向用 / FEED TO No.2 14L1
SQ1
OPTION
オプション
TC1
300VA
-A, -J
100V
230V
460
-U
-A, -U
XB1
-J
1 0
FS6
3A
0.75mm²
KM2 2K
KA8 : 乾燥ホッパ用 / FEED TO DRYING HOPPER 2A
KA10 : No.1方向用 / FEED TO No.1 2B
KA12 : No.2方向用 / FEED TO No.2 2C
JSV
OPTION
オプション
KA5
3T1
BK 黒
WH 白
M3
C
3T3
GY 灰
OG 橙
BN 茶
1.5mm²
RD/赤
-J, -A: RD/赤
-U: WH/白
GS1
L
N
+V
-V
P1A
FS7
3A
0.75mm²
P1
P2
N1
KM1
KM1
3
EV 1
6
OPTION
オプション
KA3
4
EV 2
KA6
OP1
HL2
RD
KA14
7
P1B
P1A
TC2
OP42
OP41
CN2
CN4
TB1
12V + - A B b
紫 茶 青 黄 緑 黒 黒
-J, -A
-U
P1
NEUT
HOT
A B GND
GND
PJ1
L
N
P1
P0
P2
2L1
2L2
2L3
FS1
FS2
3L1
3L2
3L3
TA1
TA2
CT1
CT2
2
0
JSV (200VAC)
IN CASE OF 200VAC POWER ONLY
AC200V電源時のみ
JET CLONE DAMPER
ジェットクロンダンパ
IN CASE OF 200VAC POWER ONLY
AC200V電源時のみ
JSV (100VAC)
IN CASE OF 100VAC POWER ONLY
AC100V電源時のみ
HONEYCOMB ROTATION
ハニカム回転
25W
CIRCUIT POWER SUPPLY
操作電源
24VDC
CONTROL PANEL COOLING
盤換気
DIGI-PECA UNIT
デジペカユニット
IN CASE OF 100VAC POWER ONLY
AC100V電源時のみ
COOLING OF RETURN DRY AIR
戻り乾燥エアー冷却
ALARM LIGHT
警報表示灯
OPTION
オプション
DEW POINT METER
露点表示器
OPTION
オプション
Eco-POWER METER
電力量計
OPTION
オプション
Standard dwg.
標準図
B19008
DWG. NO.
NAME
MATSUI MFG. CO., LTD.
A3TR
AUG/03/2010
PLANE TRIGONOMETRY
FORM
DATE
UNIT mm
CODE NO.
M. HARU
T. ONO
Y. YONEDA
—
SCALE
APPROVED BY
DSGND (CHKD) BY
DRAWN BY
Y. NAKAMURA
M. NAKANO
J. KINOSHITA
Y. NAKAMURA
APPD
Y. YONEDA
K. SHIMIZU
Y. YONEDA
Y. YONEDA
CHKD
Y. ARAKI
CONTENTS
P1B CONECTOR No. CHANGE
KM1 Contact
KM2 Contact
TC3, FS9
OCT/11/2016
2015/4/1
2014/10/7
2014/3/7
DATE
7
6
5
4
MARK
REVISION

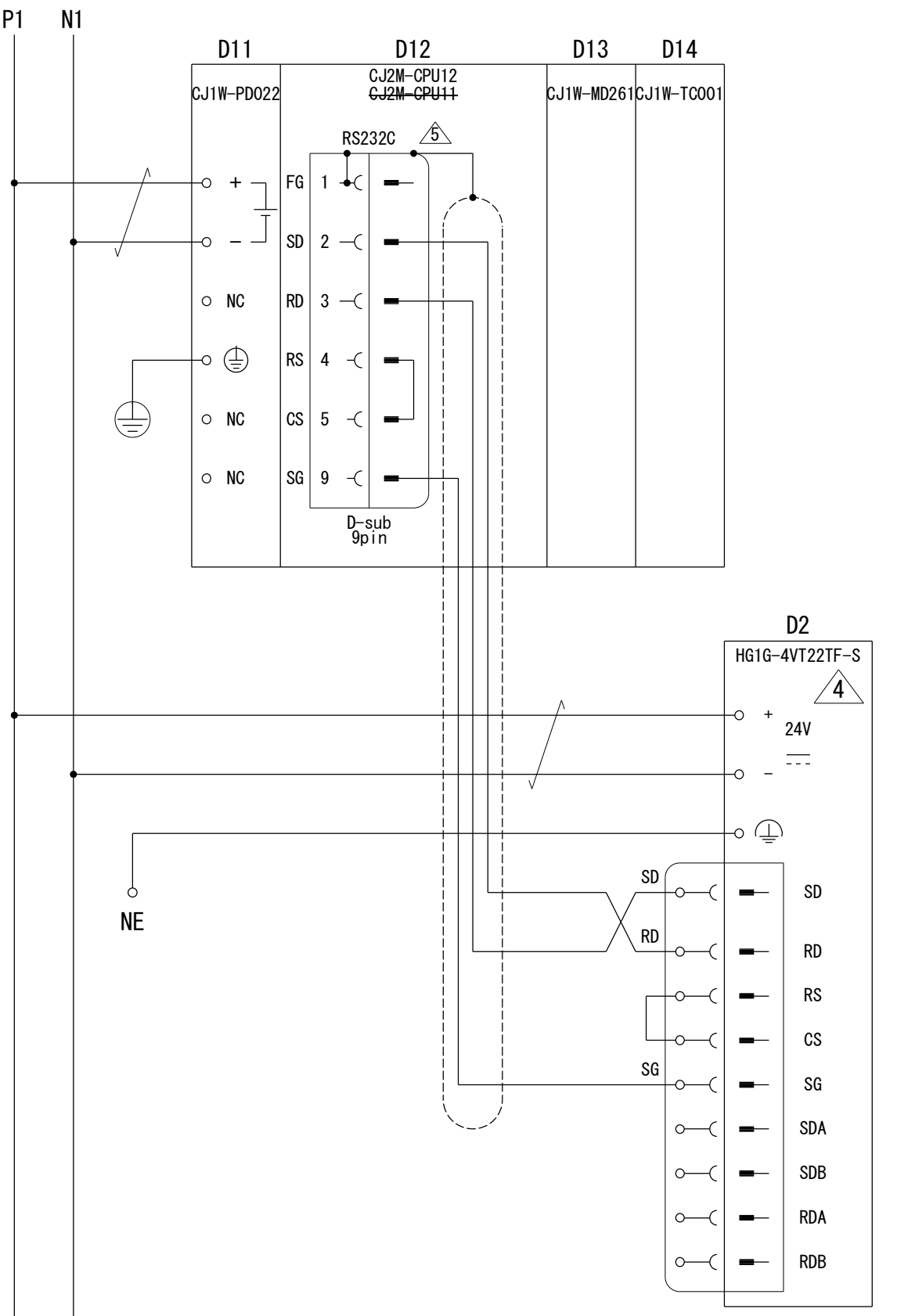


PROGRAMMABLE CONTROLLER
プログラマブルコントローラ

PROGRAMMABLE OPERATION PANEL
プログラマブル操作パネル

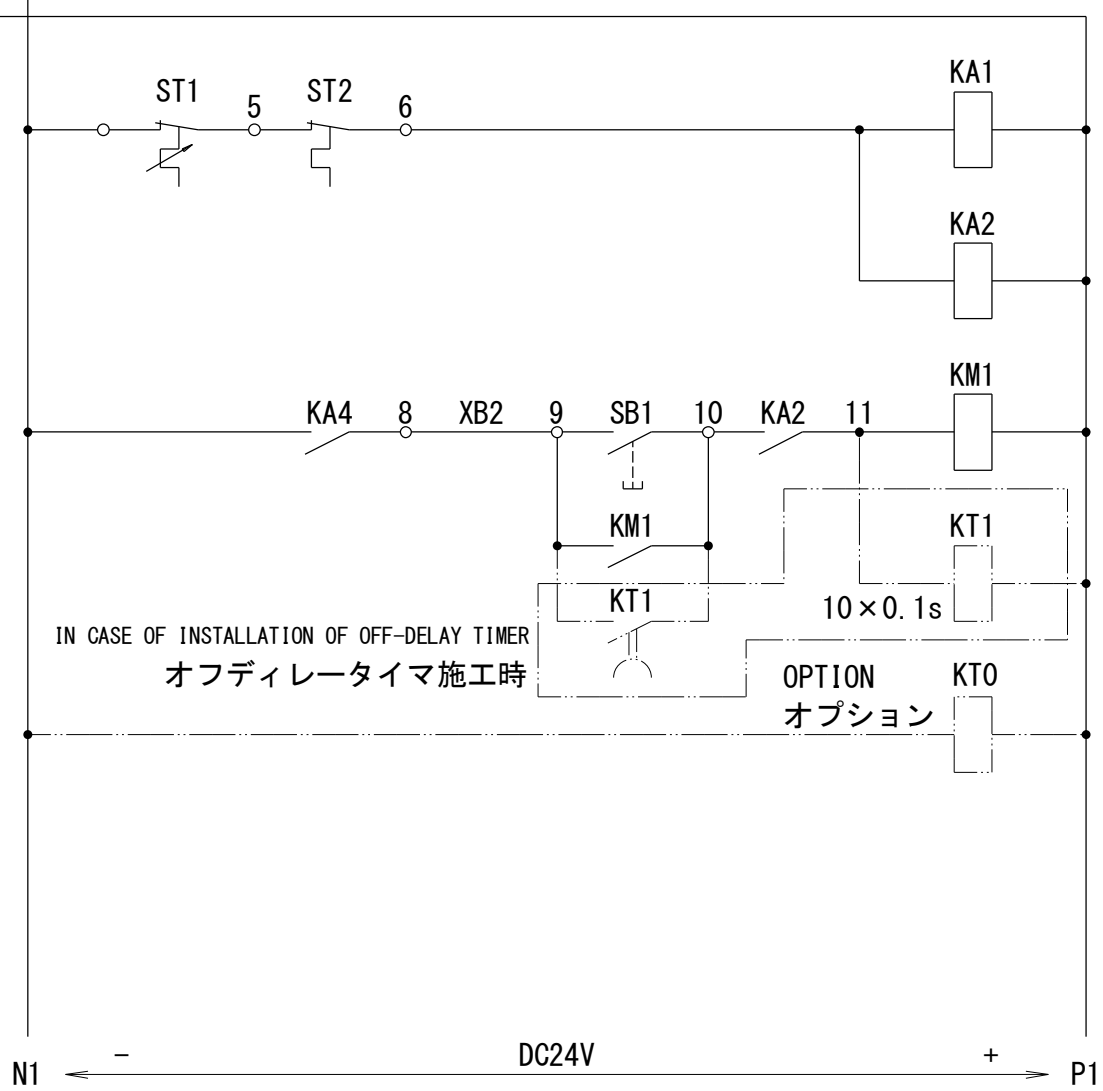


TEMP NORMAL
正常温度

ST1 : THERMOSTAT FOR DRYING
乾燥サーモスタット
ST2 : THERMOSTAT FOR REGENERATION
再生サーモスタット

CONTROL ON
コントロールオン

WEEKLY TIMER
ウィークリータイマ

Standard dwg.
標準図

| REFERENCE | MATERIAL | REQ.D | DESCRIPTION | ITEM NO. |
|---|---|---|---|---|
| | | | | |

| | |
|---|---|
| DWG. No. | B19009 |
| NAME | MATSUI MFG. CO., LTD. |
| FORM | AUG/03/2010 |
| DATE | PLANE TRIGONOMETRY |
| UNIT mm | |
| CODE NO. | — |
| M. HARU | T. ONO |
| Y. YONEDA | |
| SCALE | — |
| APPROVED BY | S. YAMASHITA |
| DSGND(CHKD)BY | S. YAMASHITA |
| DRAWN BY | M. HARU |
| APPD | M. HARU |
| CHKD | T. ONO |
| | T. ONO |
| CONTENTS | Y. YONEDA |

| MARK | DATE | CONTENTS |
|---|---|---|
| 5 | 2020/02/17 | Fixed shield wire connection |
| 4 | 2016/10/21 | D2 Change touch screen model |
| 3 | 2012/4/17 | D12, D2, KA0, KT1 |
| 2 | 2012/3/18 | KT1 |

REVISION

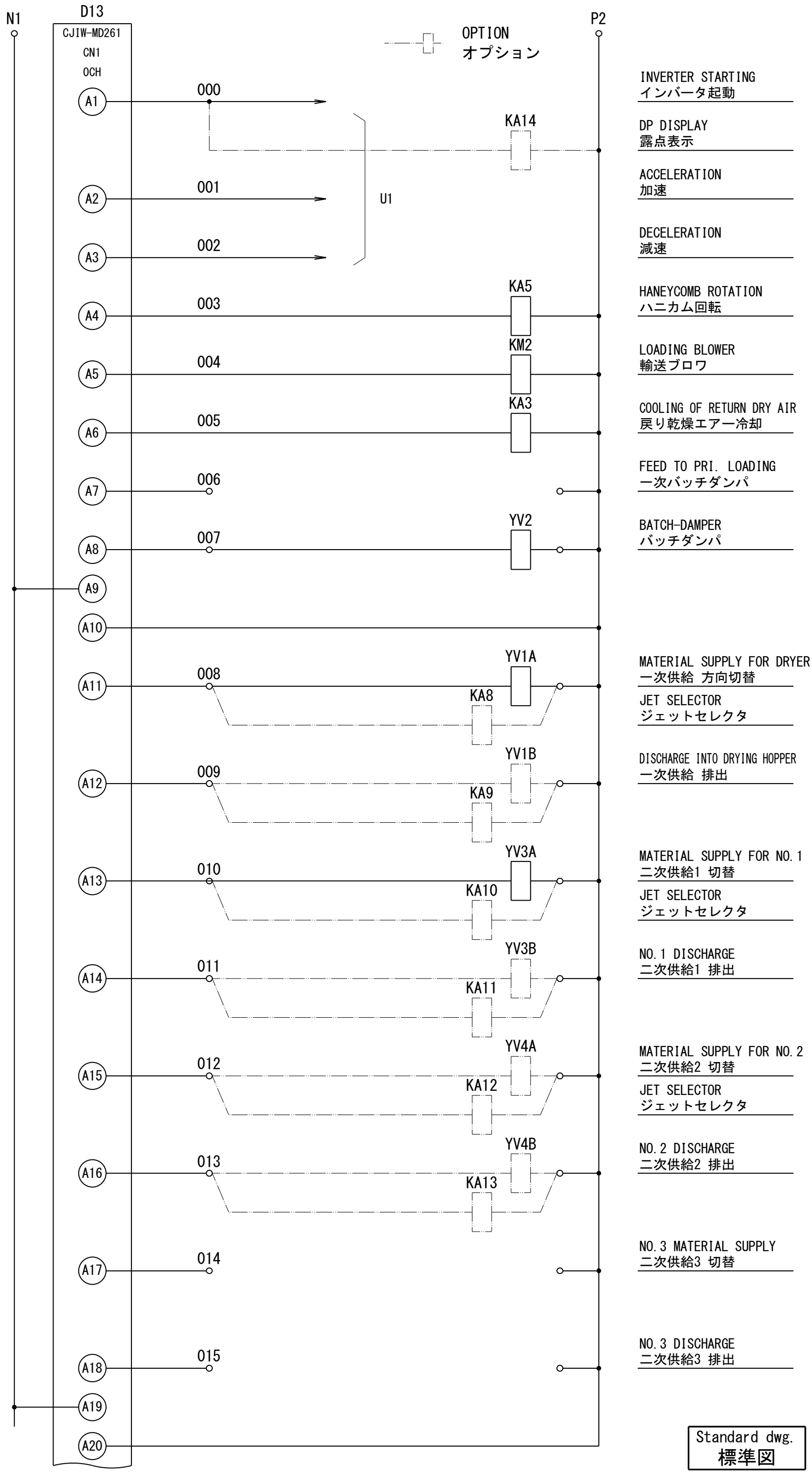


| | | | |
|---|---|---|---|
| DWG. NO. | B19010 | | |
| NAME | MATSUI MFG. CO., LTD. | | |
| | | AUG/03/2010 | PLANE TRIGONOMETRY |
| | FORM | DATE | UNIT mm |
| CODE NO. | M.HARU | T.ONO | — |
| | | Y.YONEDA | |
| SCALE | — | DSGND (CHKD) BY | DRAWN BY |
| | APPROVED BY | | |
| | | | APPD |
| | | | CHKD |
| | | | CONTENTS |
| | | | DATE |
| | | | MARK |
| | | | REVISION |

A3TR

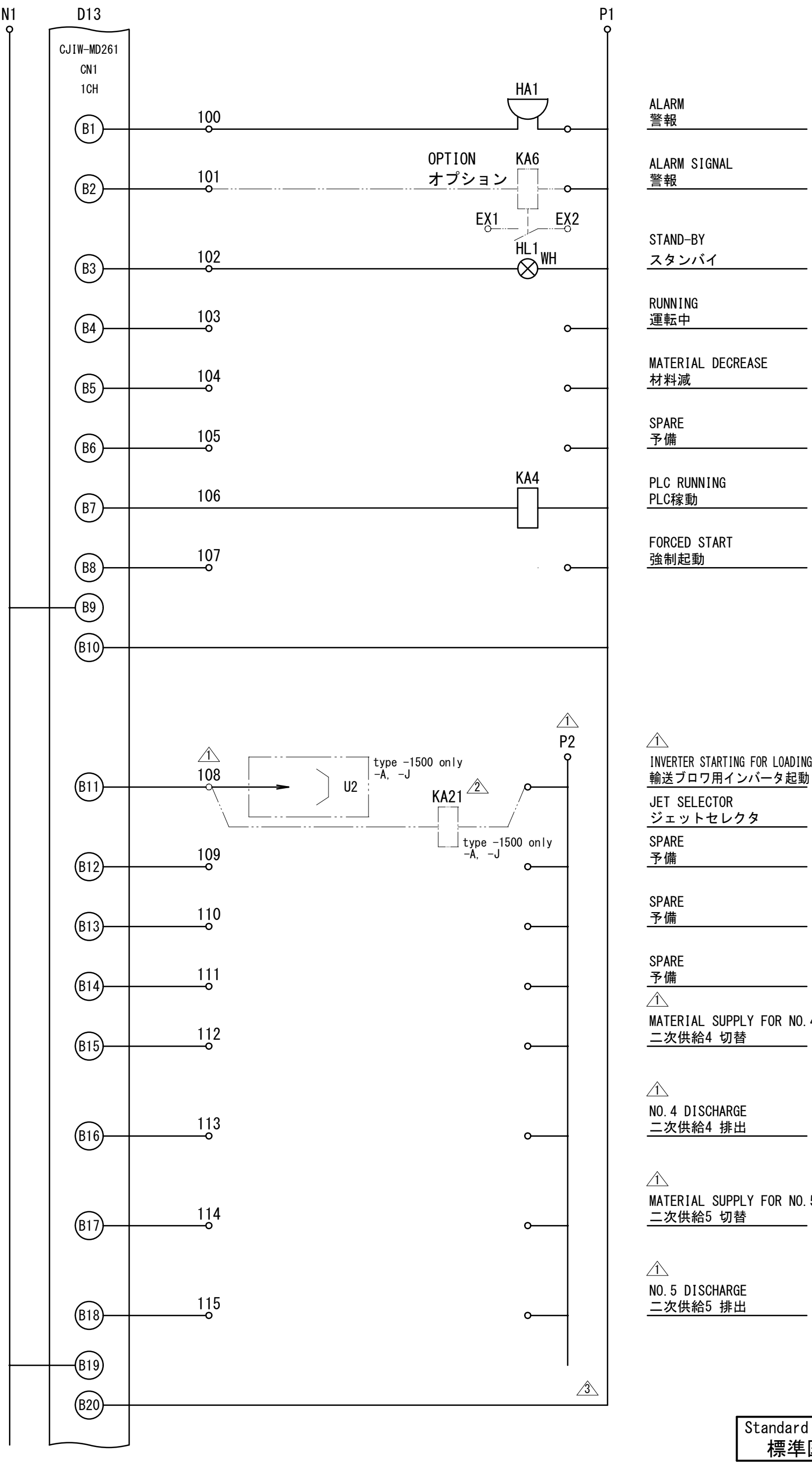


Standard dwg.
標準図

| REFERENCE | |
|---|---|
| MATERIAL | |
| REQ.D | |
| DESCRIPTION | |
| ITEM NO. | |

| | |
|---|---|
| DWG. No. | B19011 |
| NAME | MATSUI MFG. CO., LTD. |
| FORM | AUG/03/2010 |
| DATE | PLANE TRIGONOMETRY |
| UNIT mm | |
| CODE NO. | M. HARU / T. ONO / Y. YONEDA / — |
| SCALE | — |
| APPROVED BY | |
| DSGND (CHKD) BY | |
| DRAWN BY | |

| MARK | DATE | CONTENTS | CHKD | APPD |
|---|---|---|---|---|
| 3 | JAN. 26 /2016 | PLC COMMON LINE CHANGE | YONEDA | KINOSHITA |
| 2 | OCT. 8 /2014 | KA21 | YONEDA | KINOSHITA |
| 1 | JAN. 10 /2014 | COMMON LINE CHANGE | YONEDA | NAKAMURA |

REVISION

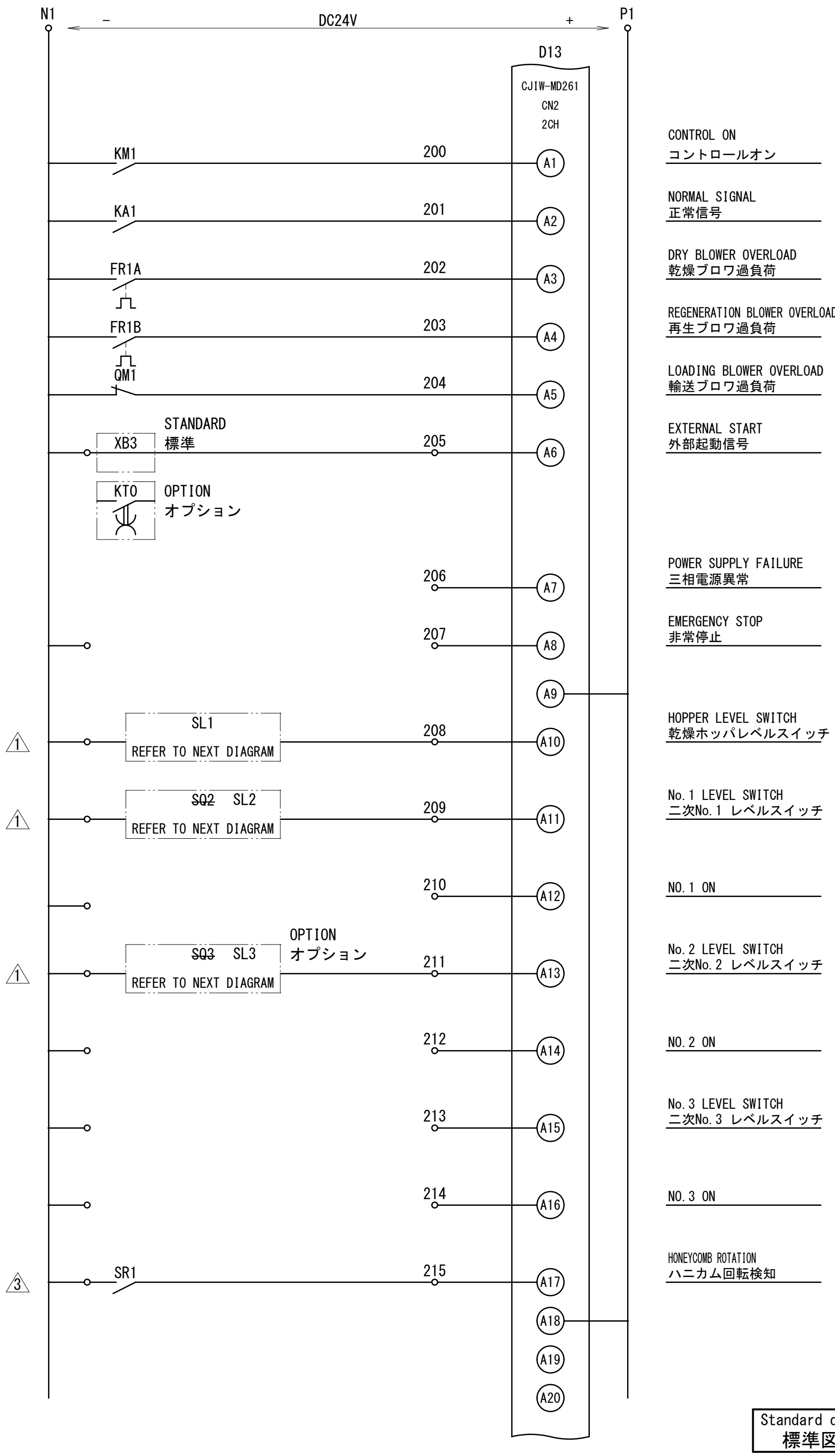


| | |
|---|---|
| REFERENCE | |
| MATERIAL | |
| REQ.D | |
| DESCRIPTION | |
| ITEM NO. | |

B19012

DWG. No.

NAME

MATSUI MFG. CO., LTD.

| | | | |
|---|---|---|---|
| | | AUG/03/2010 | PLANE TRIGONOMETRY |
| | FORM | DATE | UNIT mm |
| CODE NO. | M. HARU | T. ONO / Y. YONEDA | — |
| SCALE — | APPROVED BY | DSGND (CHKD) BY | DRAWN BY |
| | YONEDA KINOSHITA | ONO HARU | ONO HARU CHKD APPD |
| | HONEYCOMB ROTATION | Line 206 | SQ2 -> SL2 , SQ3 -> SL3 CONTENTS |

| MARK | DATE |
|---|---|
| 3 | MAY 15 /2015 |
| 2 | MAY 22 /2012 |
| 1 | JUN. 16 /2011 |

REVISION

8

## LEVEL SWITCH OF DRY MATERIAL
## 乾燥ホッパレベルスイッチ
SL1

[ ]: CONTACT NUMBER

LIMIT SWITCH CONTROL TYPE
リミット制御

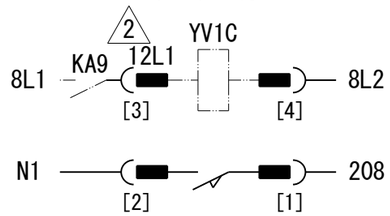


PADDLE LEVEL SWITCH CONTROL TYPE
レベル計制御

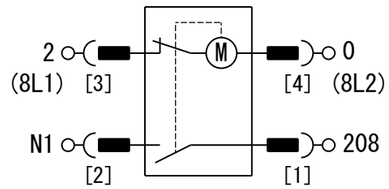


PROXIMITY SWITCH CONTROL TYPE
静電容量近接スイッチ制御

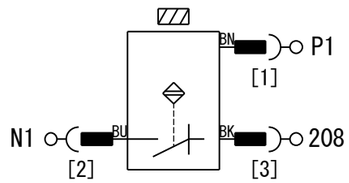


PHOTOELECTRIC SWITCH CONTROL TYPE
光電スイッチ制御

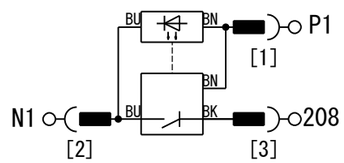


## LEVEL SWITCH OF NO.1 MATERIAL
## 二次No.1 レベルスイッチ
SL2

LIMIT SWITCH CONTROL TYPE
リミット制御

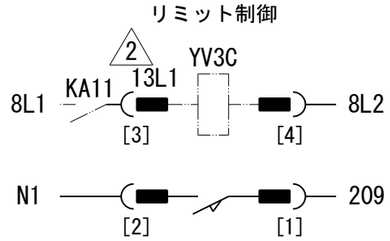


PADDLE LEVEL SWITCH CONTROL TYPE
レベル計制御

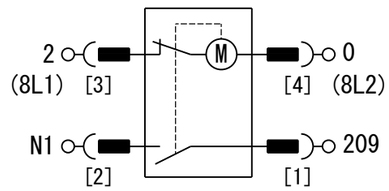


PROXIMITY SWITCH CONTROL TYPE
静電容量近接スイッチ制御

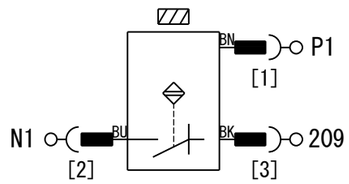


PHOTOELECTRIC SWITCH CONTROL TYPE
光電スイッチ制御

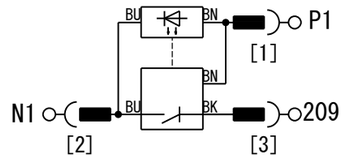


## LEVEL SWITCH OF NO.2 MATERIAL
## 二次No.2 レベルスイッチ
SL3

LIMIT SWITCH CONTROL TYPE
リミット制御

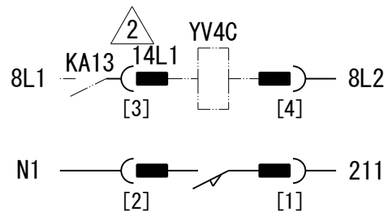


PADDLE LEVEL SWITCH CONTROL TYPE
レベル計制御

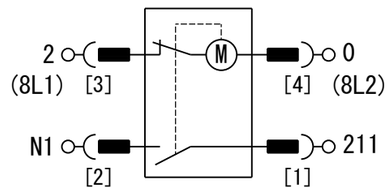


PROXIMITY SWITCH CONTROL TYPE
静電容量近接スイッチ制御

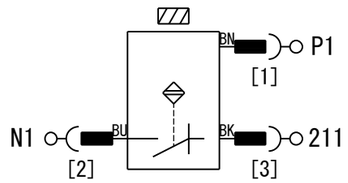


PHOTOELECTRIC SWITCH CONTROL TYPE
光電スイッチ制御

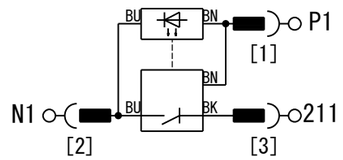


Standard dwg.
標準図

| REVISION | | | | | | | | | | |
|---|---|---|---|---|---|---|---|---|---|---|
| | | | | | SCALE | — | CODE NO. | | | |
| | | | | | APPROVED BY | | M. HARU | FORM | | |
| 2 | 2015/10/15 | ADD TO LINE NUMBER/線番追加 | Y. ARAKI | Y. NAKAMURA | DSGND (CHKD) BY | | T. ONO | — | DATE | JUN. 16/2011 |
| 1 | 2011/8/2 | LINE NUMBER/線番 3 -> 2 | T. ONO | M. HARU | | | | | | |
| MARK | DATE | CONTENTS | CHKD | APPD | DRAWN BY | | — | UNIT mm | PLANE TRIGONOMETRY | |

| | | | |
|---|---|---|---|
| NAME | | DWG. NO. | B32108 |
| MATSUI MFG. CO., LTD. | | | |

A3

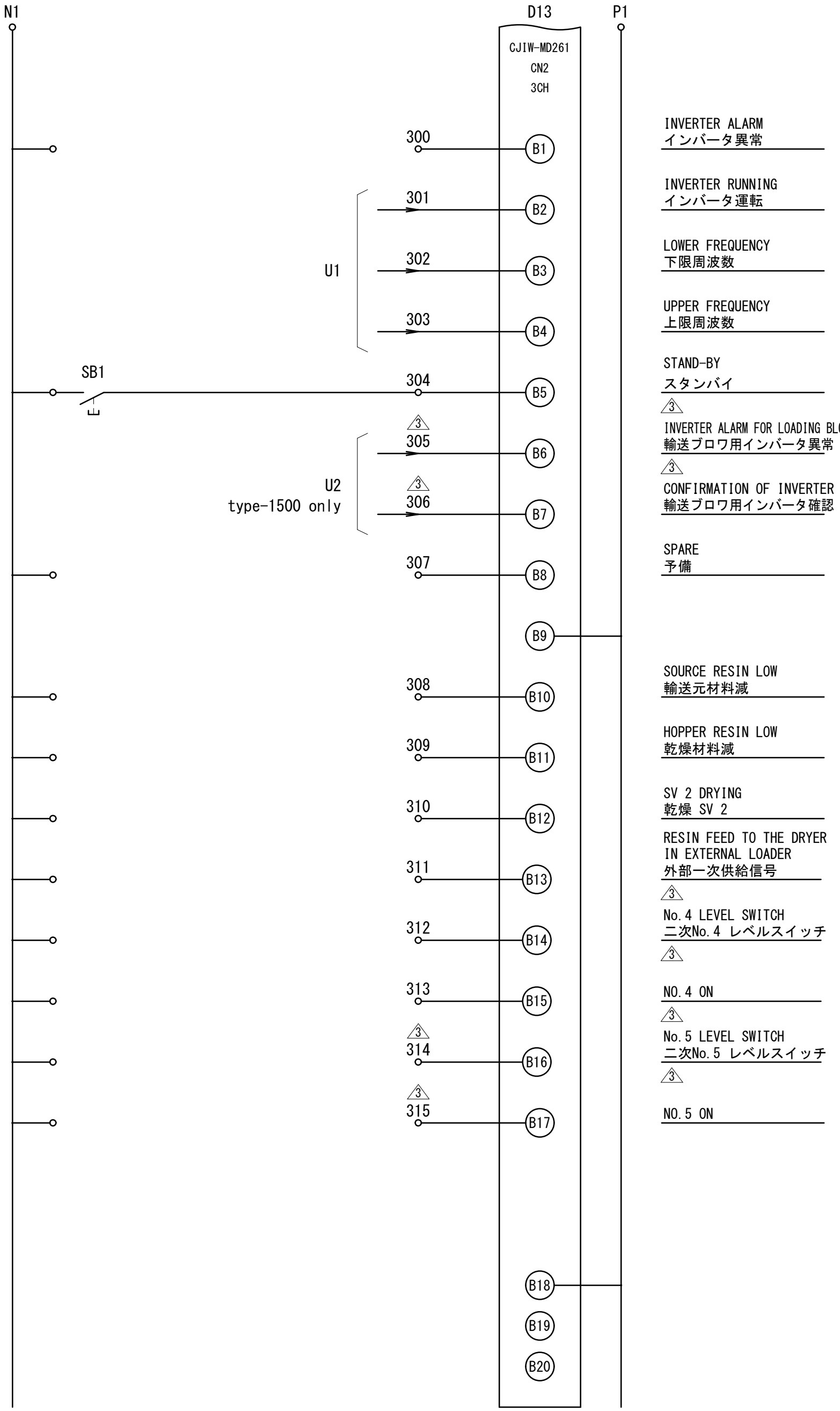


Standard dwg.
標準図

| REFERENCE | MATERIAL | REQ.D | DESCRIPTION | ITEM NO. |
|---|---|---|---|---|
| | | | | |

| | |
|---|---|
| DWG. No. | B19013 |
| NAME | |
| MATSUI MFG. CO., LTD. | |

| | | | |
|---|---|---|---|
| CODE NO. | — | FORM | AUG/03/2010 |
| SCALE | — | DATE | PLANE TRIGONOMETRY |
| APPROVED BY | M. HARU | UNIT mm | |
| DSGND (CHKD) BY | T. ONO / Y. YONEDA | | |
| DRAWN BY | — | | |

| REVISION | | | |
|---|---|---|---|
| MARK | DATE | CONTENTS | CHKD |
| 3 | 2014/1/10 | INPUT 312-315/入力312-315 | Y. YONEDA / Y. NAKAMURA |
| 2 | 2012/8/30 | INPUT 311/入力311 | T. ONO / M. HARU |
| 1 | 2012/4/24 | INPUT 310/入力310 | T. ONO / M. HARU |

8

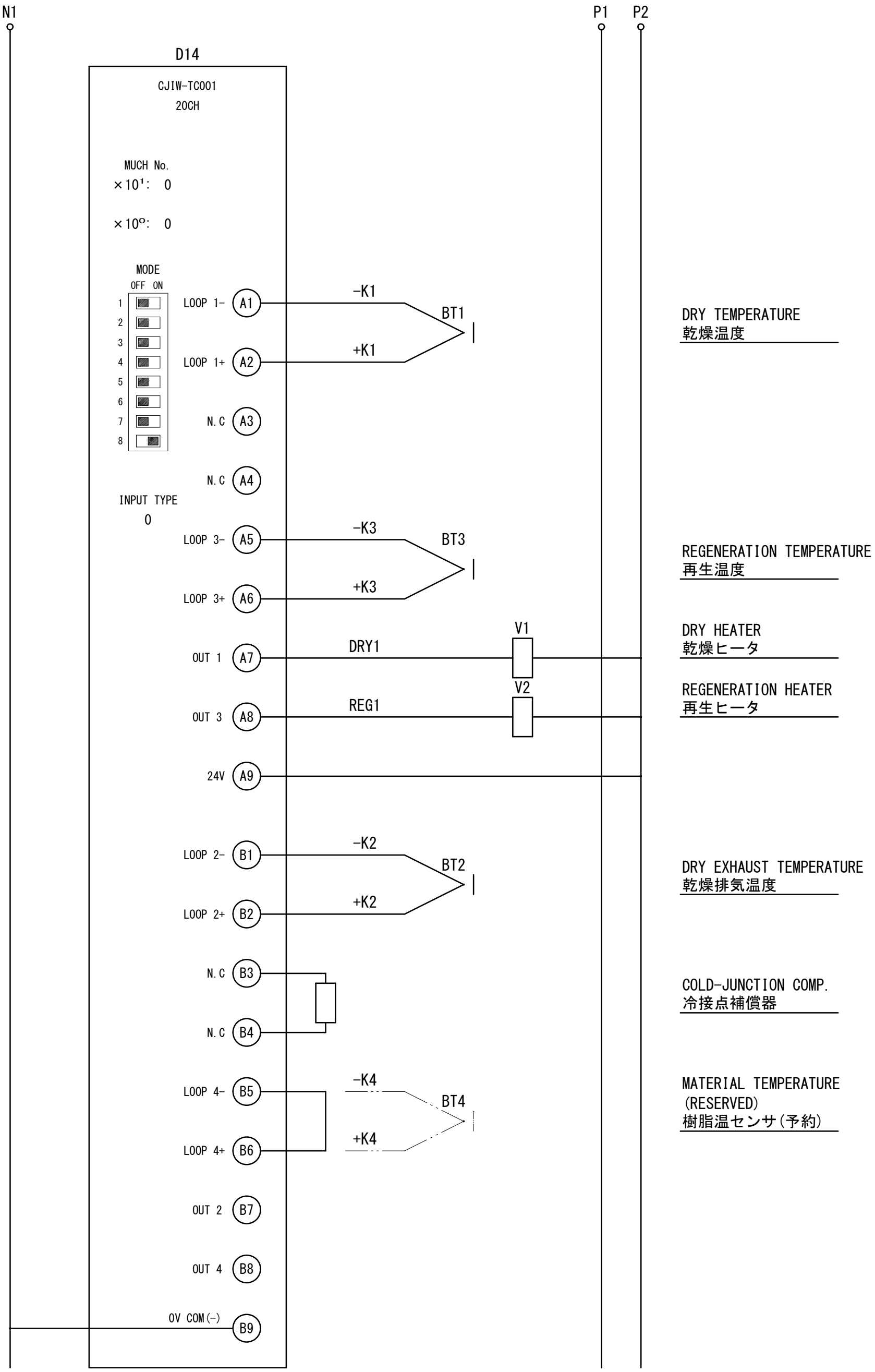


| | | | |
|---|---|---|---|
| B19014 | DWG. No. | | NAME |
| MATSUI MFG. CO., LTD. | | | |
| PLANE TRIGONOMETRY | AUG/03/2010 | | |
| UNIT mm | DATE | FORM | |
| — | T. ONO | M. HARU | CODE NO. |
| | Y. YONEDA | | |
| DRAWN BY | DSGND (CHKD) BY | APPROVED BY | SCALE — |
| APPD | | | |
| CHKD | | | |
| CONTENTS | | | |
| DATE | | | |
| MARK | | | |
| REVISION | | | |

| ITEM NO. | DESCRIPTION | REQ. D | MATERIAL | REFERENCE |
|---|---|---|---|---|
| | CONTROL PANEL BOX<br>制御盤ボックス | | SPCC | t1.5 (1.6) |

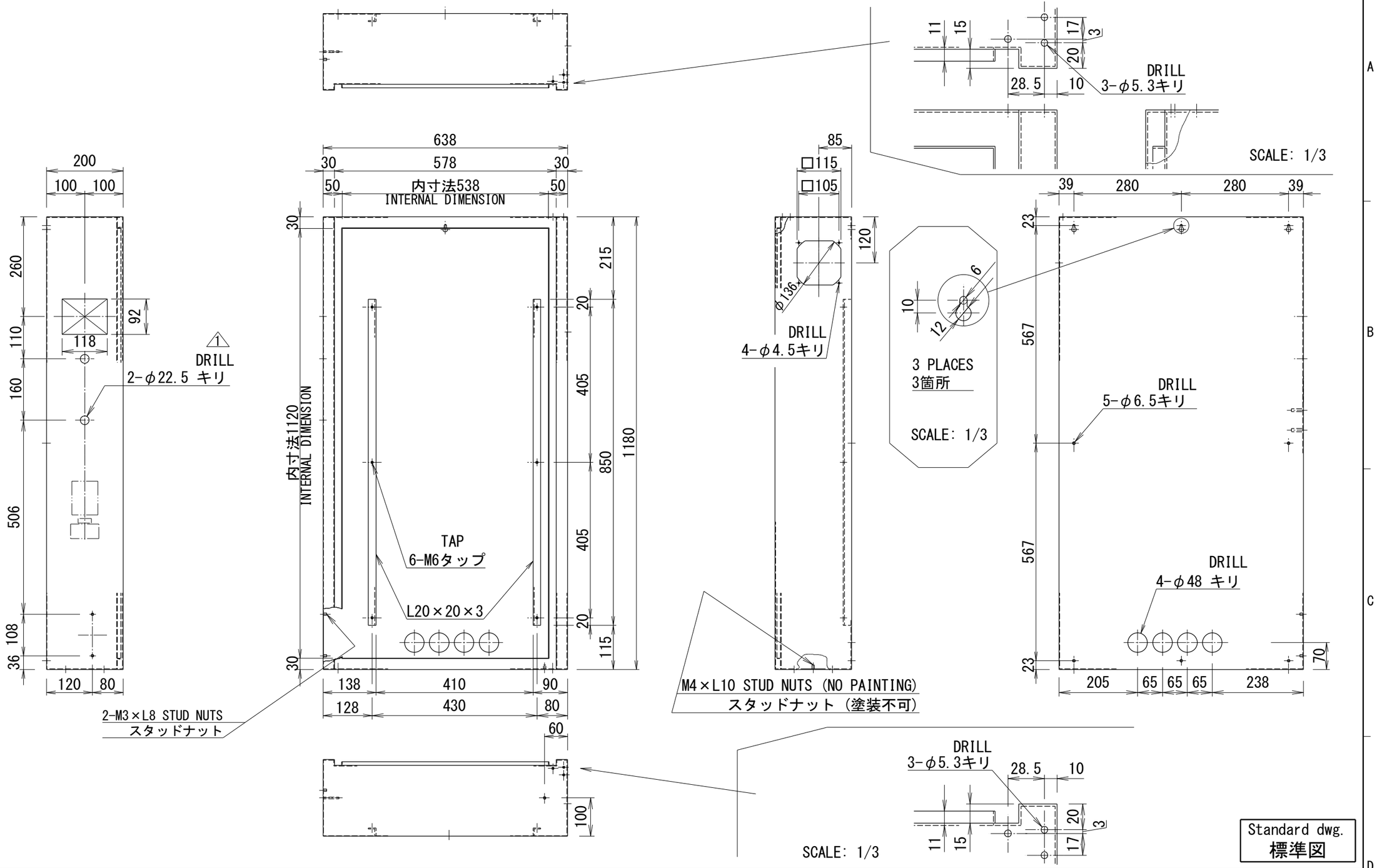


Standard dwg.
標準図

| REVISION | | | | |
|---|---|---|---|---|
| △ | | | | |
| △ | | | | |
| 1 | AUG. 27/2018 | Change of buzzer mounting process.<br>ブザー取付け加工変更 | YONEDA | MATSUSHITA |
| △ | | ORIGINAL B23395 | | |
| MARK | DATE | CONTENTS | CHKD | APPD |

| | | | |
|---|---|---|---|
| SCALE | 1/10 (1/3) | CODE NO. | |
| APPROVED BY | S. YAMASHITA | FORM | |
| DSGND (CHKD) BY | Y. YONEDA — | DATE | OCT 21/2016 |
| DRAWN BY | — | UNIT mm | PLANE TRIGONOMETRY |

| | | | |
|---|---|---|---|
| NAME | | DWG. NO. | D18308 |

MATSUI MFG. CO., LTD.

| ITEM NO. | DESCRIPTION | REQ. D | MATERIAL | REFERENCE |
|---|---|---|---|---|
| | CONTROL PANEL LID<br>制御盤蓋 | | SPCC | t1.5 (1.6) |

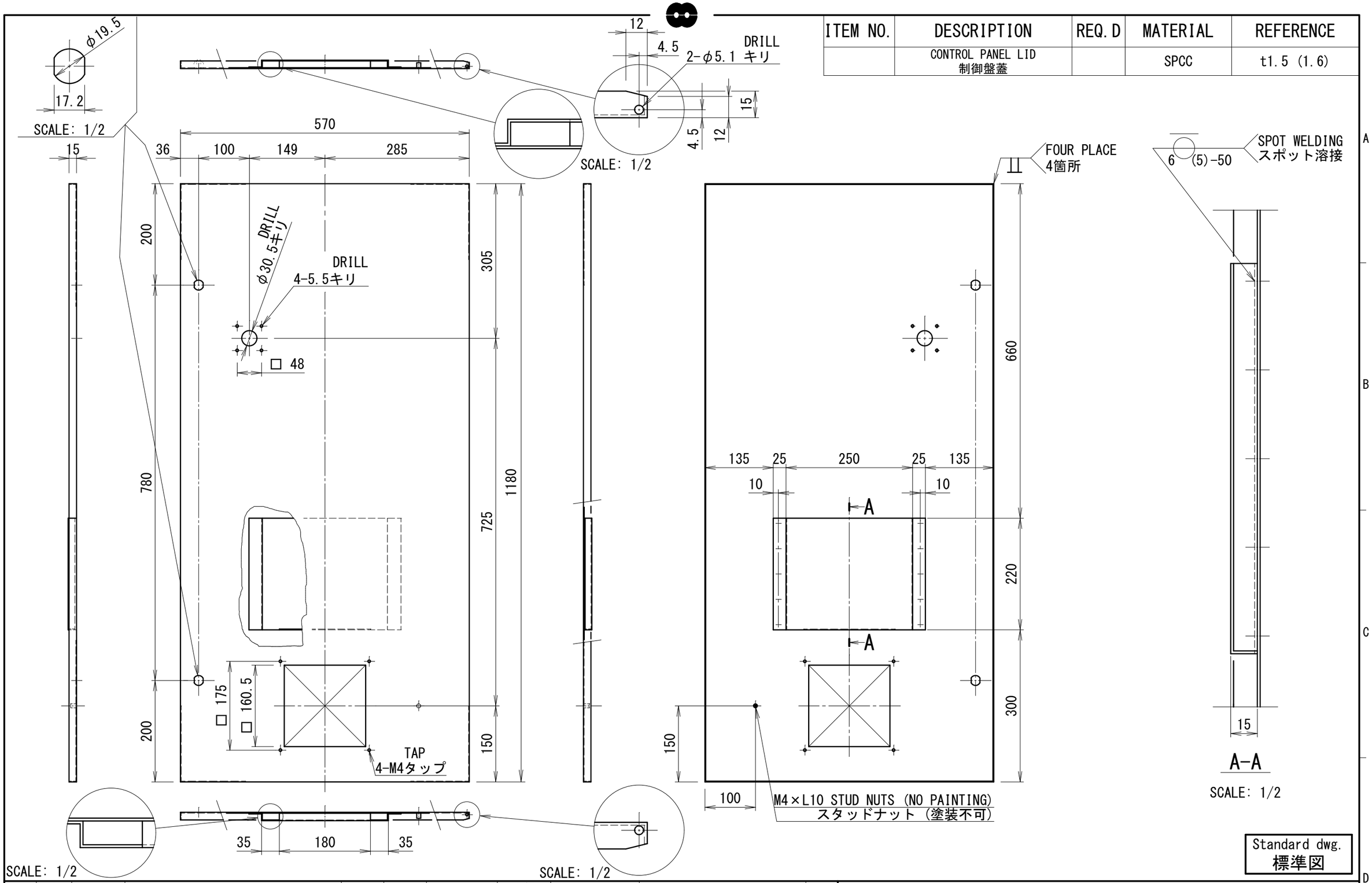


Standard dwg.
標準図

| REVISION | | | | | |
|---|---|---|---|---|---|
| MARK | DATE | CONTENTS | CHKD | APPD | |
| | | ORIGINAL KB19018_2 | | | |

| | | | | | |
|---|---|---|---|---|---|
| SCALE | 1/7 (1/2) | CODE NO. | | | |
| APPROVED BY | | M. HARU | FORM | | |
| DSGND (CHKD) BY | | T. ONO | — | DATE | NOV 30/2010 |
| DRAWN BY | | — | UNIT mm | PLANE TRIGONOMETRY | |

| | | | |
|---|---|---|---|
| NAME | | DWG. NO. | B23396 |

MATSUI MFG. CO., LTD.

1 2 3 4 5

①

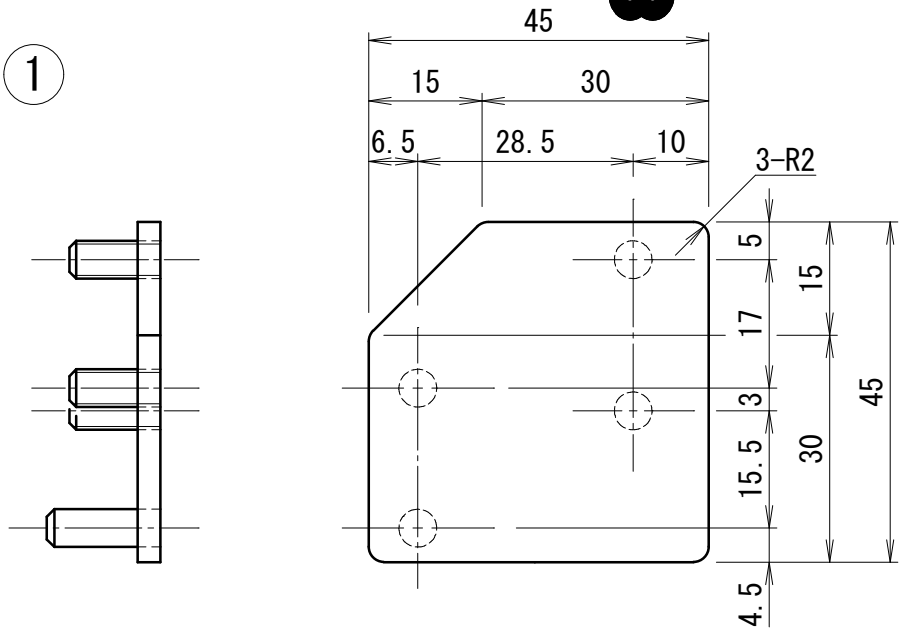


WELD AFTER DRIVING PIN INTO "φ5 hole"
下穴φ5に打込後溶接

WELD AFTER SCREW "M5×L12 THREADED ROD" IN
M5タップねじ込み後溶接 3箇所

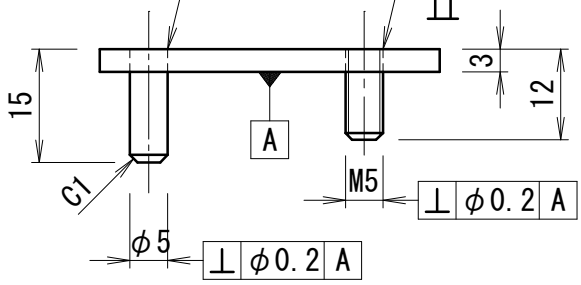


② * SYMMETRICAL SHAPE OF ITEM NO. 1
※ 1と上下対称

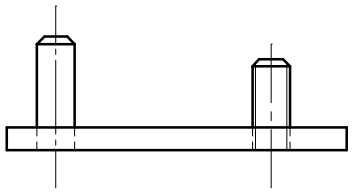

Standard dwg.
標準図

| ITEM NO. | DESCRIPTION | REQ.D | MATERIAL | REFERENCE |
|---|---|---|---|---|
| 1 | UPPER HINGE<br>上ヒンジ | 1 | SUS304 | |
| 2 | LOWER HINGE<br>下ヒンジ | 1 | SUS304 | |

| | | | | | |
|---|---|---|---|---|---|
| △ | | NAME | | FORM | |
| △ | | APPROVED BY | M.HARU | CODE NO. | |
| △ | | DSGND(CHKD)BY | T.ONO — | DATE | JUN 1/2012 |
| △ | | DRAWN BY | — | UNIT mm | PLANE TRIGONOMETRY |
| △ | Original B23394 | SCALE | 1/6 | DWG. NO. | B46686 |
| REVISION | APPD CHKD | MATSUI MFG. CO., LTD. | | | |

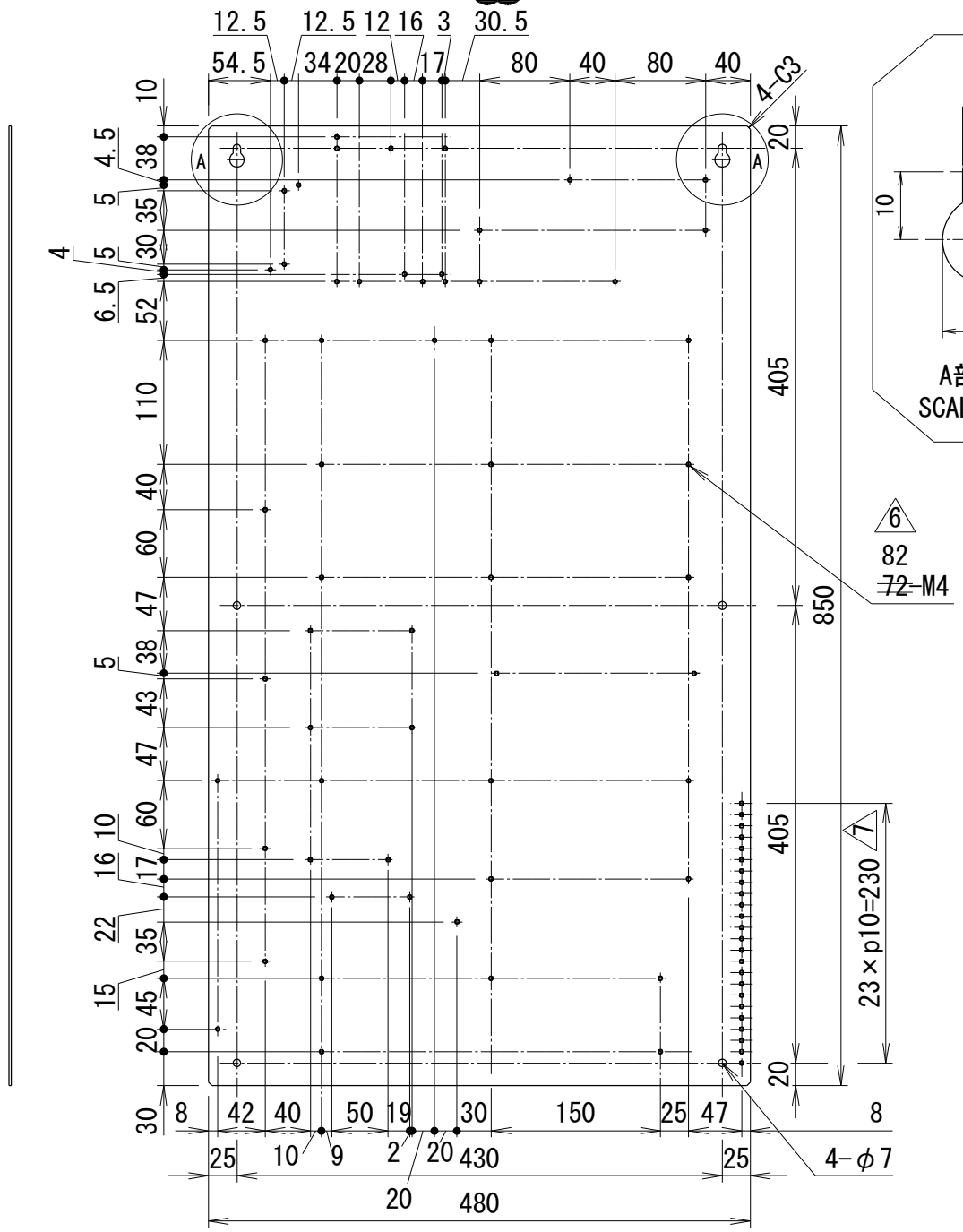


ZINC PLATING CHROMIC ($Cr^{3+}$) TREATMENT (NO PAINTING)
亜鉛メッキ(三価)クロミック処理仕上げ (塗装不可)

Standard dwg.
標準図

| ITEM NO. | DESCRIPTION | REQ. D | MATERIAL | REFERENCE |
|---|---|---|---|---|
| | RELAY PLATE<br>リレー板 | | SPCC | t2.3 |

| REVISION | | | | | | |
|---|---|---|---|---|---|---|
| △ | | | NAME | | FORM | |
| 7 | GROUNDING POSITION CHANGE<br>アース加工位置変更<br>2019/7/2 | MATSUSHITA<br>YONEDA | APPROVED BY | M. HARU | CODE NO. | |
| | | | DSGND (CHKD) BY | T. ONO — | DATE | MAY 11/2010 |
| 6 | ADDITIONAL GROUNDING<br>アース加工追加<br>2018/8/27 | MATSUSHITA<br>YONEDA | DRAWN BY | — | UNIT mm | PLANE TRIGONOMETRY |
| 5 | RAIL FIXED HOLES DRILLING<br>レール固定穴加工<br>2014/5/8 | KINOSHITA<br>YONEDA | SCALE | 1/6 | DWG. NO. | B19019 |
| | | APPD<br>CHKD | MATSUI MFG. CO., LTD. | | | |

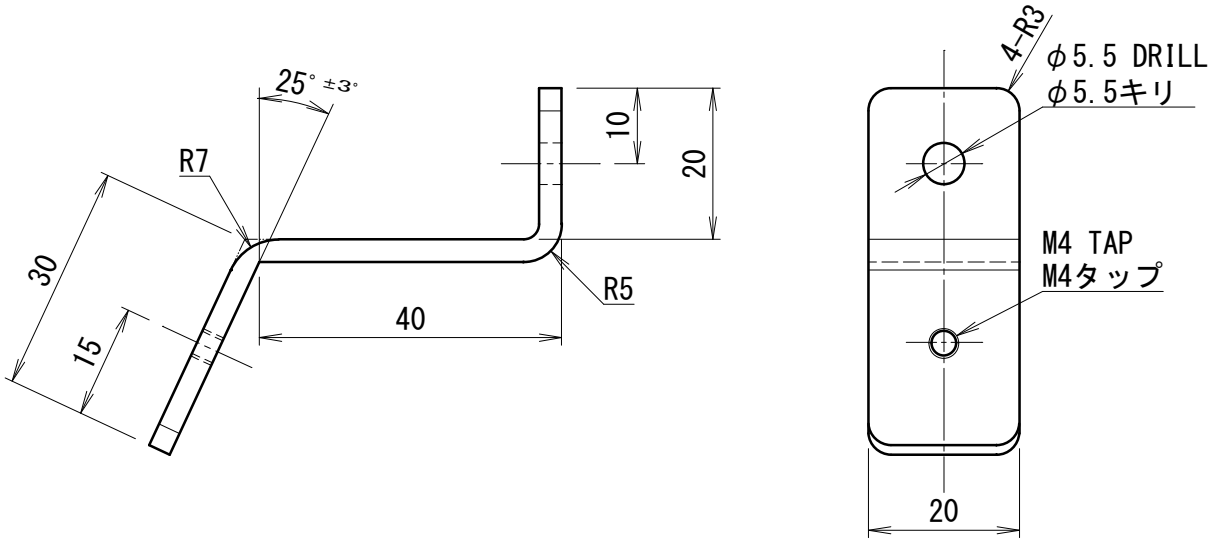


ZINC PLATING CHROMIC ($Cr^{3+}$) TREATMENT (NO PAINTING)
亜鉛メッキ(三価)クロミック処理仕上げ (塗装不可)

Standard dwg.
標準図

| ITEM NO. | DESCRIPTION | REQ. D | MATERIAL | REFERENCE |
|---|---|---|---|---|
| | RAIL FITTING<br>レール取付金具 | | Q235A | t3 |

| | | | | | |
|---|---|---|---|---|---|
| NAME | | | FORM | | |
| APPROVED BY | M. HARU | | CODE NO. | | |
| DSGND (CHKD) BY | T. ONO | — | DATE | JUN 16/2011 | |
| DRAWN BY | — | | UNIT mm | PLANE TRIGONOMETRY | |
| SCALE | 1/1 | | DWG. NO. | B32038 | |

| REVISION | APPD | CHKD |
|---|---|---|
| △ | | |
| △ | | |
| △ | | |
| △ | | |

MATSUI MFG. CO., LTD.

| ITEM NO. | DESCRIPTION | REQ. D | MATERIAL | REFERENCE |
|---|---|---|---|---|
| OP1 | ROTATING LIGHT<br>回転灯 | 1 | XVR3M04 | SCHNEIDER<br>△5 シュナイダー |
| OP3 | DIGITAL TIME SWITCH<br>デジタルタイムスイッチ | 1 | (H5S-WB2D)<br>H5S-WA2D | OMRON<br>オムロン |
| OP4-1 | DISPLAY P.C.B.<br>露点温度表示器 | 1 | CODE NO. 27525 | ORION<br>△2 オリオン |
| OP4 | DEW POINT MONITOR<br>露点温度表示器 | 1 | 6392N-115V | NEWPORT SCIENTIFIC |
| OP5-1 | Eco-POWER METER<br>電力量計 | 1 | KW1M-H<br>AKW1822 | PANASONIC<br>パナソニック |

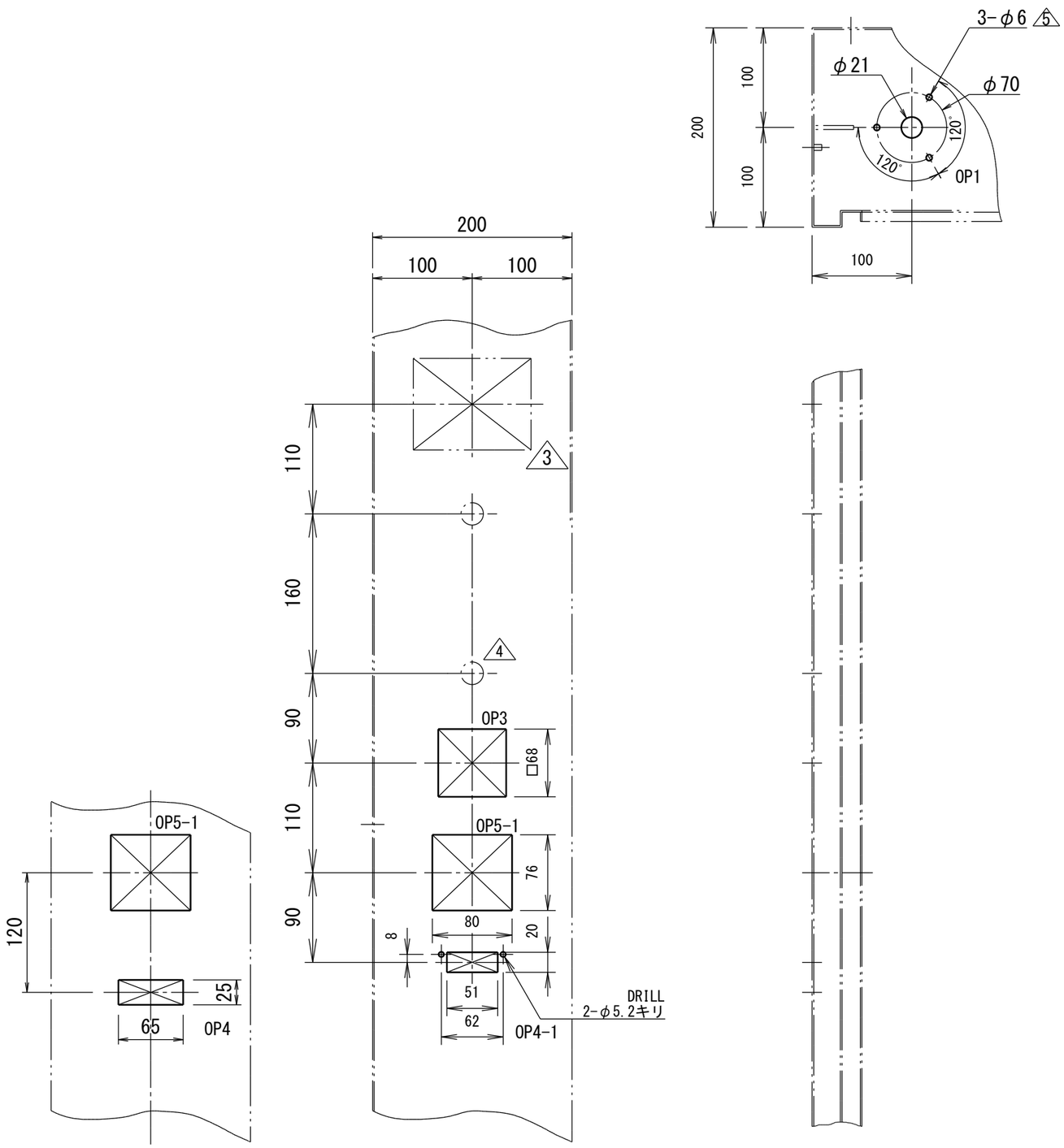


Standard dwg.
標準図

| REVISION | | | | | |
|---|---|---|---|---|---|
| MARK | DATE | CONTENTS | CHKD | APPD | |
| △5 | NOV/20/2020 | Rotating light model change<br>回転灯型式変更 | Y. YONEDA | K. MATSUSHITA | |
| △4 | AUG/27/2018 | Change of buzzer mounting process.<br>ブザー取付け加工変更 | Y. YONEDA | K. MATSUSHITA | |
| △3 | OCT/21/2016 | Change touch screen model<br>タッチパネル型式変更 | Y. YONEDA | S. YAMASHITA | |
| △2 | OCT/13/2016 | CHANGE BY THE PRODUCTION STOP (DEW POINT METER)<br>生産中止品による変更（露点計） Y. ARAKI | Y. YONEDA | Y. NAKAMURA | |

| | | | | | |
|---|---|---|---|---|---|
| SCALE | 1/8 | CODE NO. | 700201 | ユ | |
| APPROVED BY | | M. HARU | FORM | | |
| DSGND (CHKD) BY | | Y. YONEDA | T. ONO | DATE | JUN 9/2011 |
| DRAWN BY | | — | UNIT mm | PLANE TRIGONOMETRY | |

| | | | |
|---|---|---|---|
| NAME | | DWG. NO. | B31478 |

MATSUI MFG. CO., LTD.

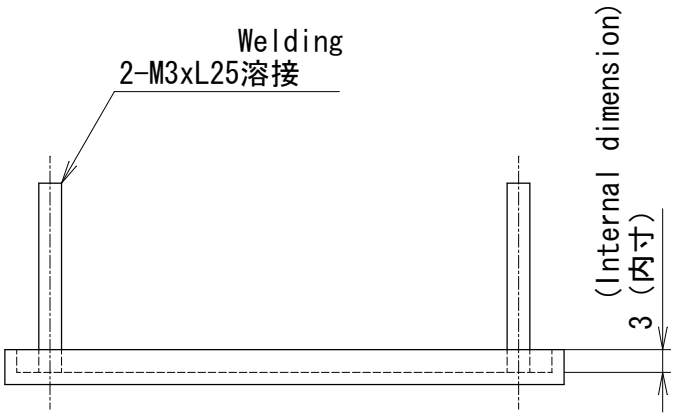


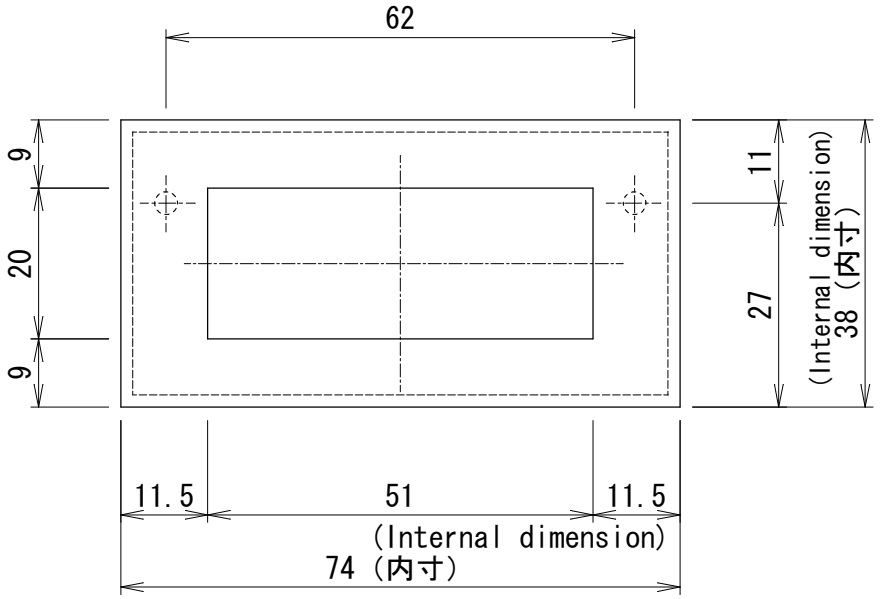


Standard dwg.
標準図

| ITEM NO. | DESCRIPTION | REQ.D | MATERIAL | REFERENCE |
|---|---|---|---|---|
| | Mounting frame of dew point display part<br>露点計表示部取付枠 | | SS400 | t=1.6 |

| | | | | | | |
|---|---|---|---|---|---|---|
| △ | | | NAME | | FORM | |
| △ | | | APPROVED BY | YAMAMOTO | CODE NO. | |
| △ | | | DSGND(CHKD)BY | — — | DATE | MAR/18/2002 |
| △ | | | DRAWN BY | — | UNIT mm | PLANE TRIGONOMETRY |
| 1 | AUG/12/2003<br>Revised by MST-551<br>MST-551により訂正 | YAMA MOTO | SCALE | 1/1 | DWG. NO. | 844369 |
| REVISION | | YOKO TANI<br>APPD<br>CHKD | MATSUI MFG. CO., LTD. | | | |

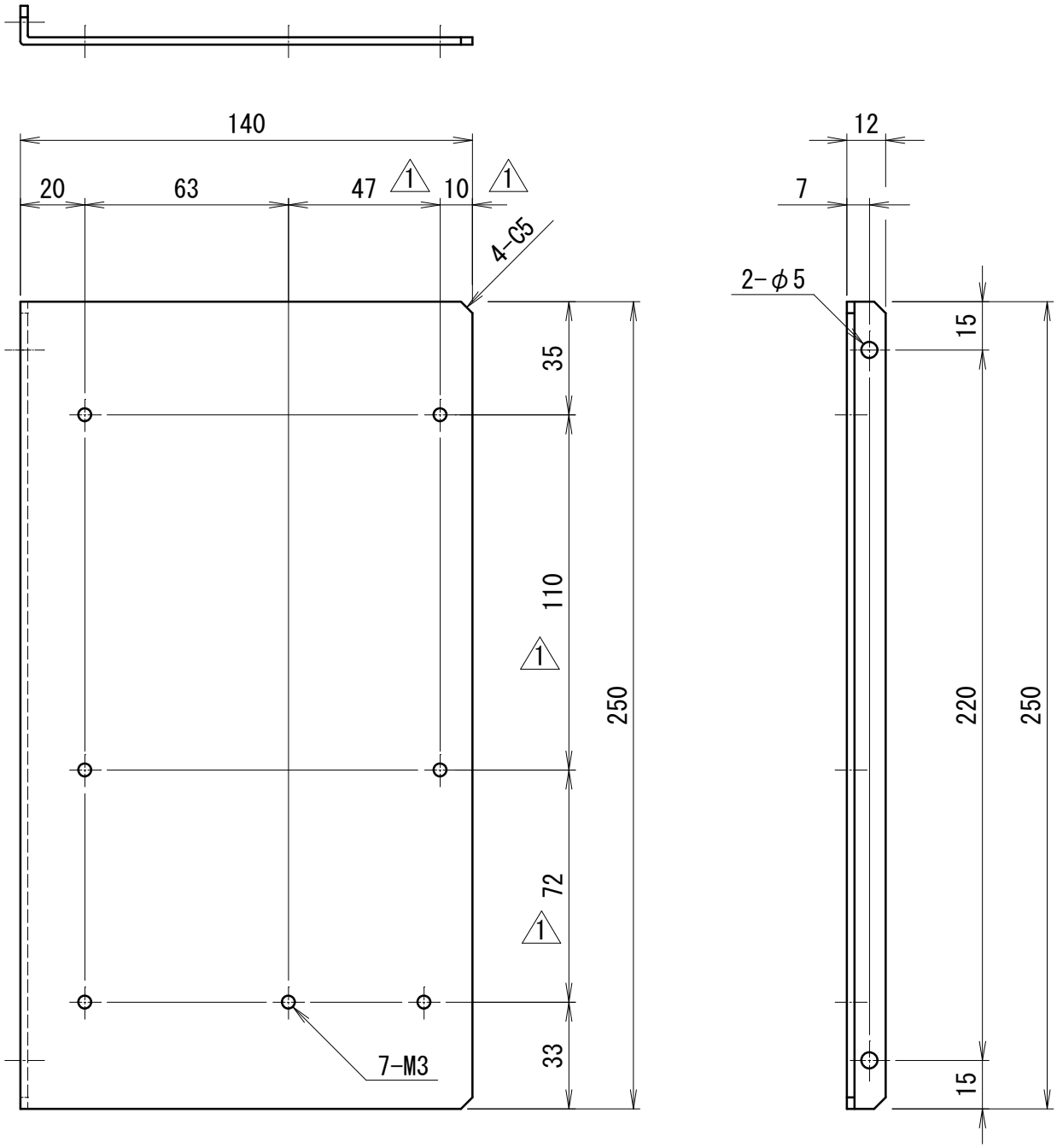


Electroplated coating of zinc and unpaint
〔Trivalent chromate (chromic) treatment〕
塗装不要、亜鉛メッキ三価有色クロメート(クロミック)処理

Standard dwg.
標準図

| ITEM NO. | DESCRIPTION | REQ. D | MATERIAL | REFERENCE |
|---|---|---|---|---|
| | Bracket / ブラケット | 1 | SPCC | t2.3(2.0) |

| | | | | | |
|---|---|---|---|---|---|
| △ | | NAME | | FORM | |
| △ | | APPROVED BY | M. HARU | CODE NO. | |
| △ | | DSGND(CHKD)BY | — TSUJI | DATE | Mar/17/2010 |
| △ | | DRAWN BY | — | UNIT mm | PLANE TRIGONOMETRY |
| △1 | 取付け寸法変更 MOUNTING DIMENSIONS CHANGE Y.ARAKI | SCALE | 1/2 | DWG. No. | B15073 |
| REVISION | | Y.NAKAMURA / Y.YONEDA / APPD / CHKD | MATSUI MFG. CO., LTD. | | |

## LEVEL SWITCH OF NO.3 MATERIAL
## 二次No.3 レベルスイッチ

[ ]: CONTACT NUMBER

SL4 △1

LIMIT SWITCH CONTROL TYPE
リミット制御

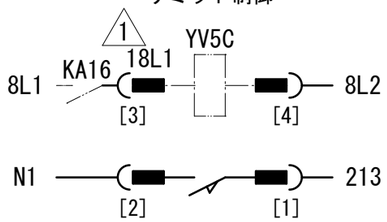


PADDLE LEVEL SWITCH CONTROL TYPE
レベル計制御

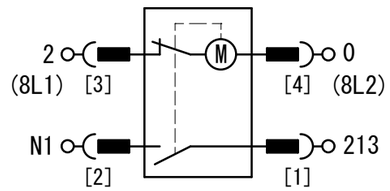


PROXIMITY SWITCH CONTROL TYPE
静電容量近接スイッチ制御

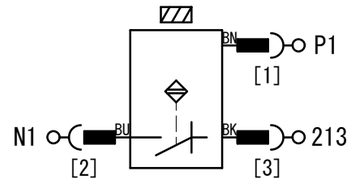


PHOTOELECTRIC SWITCH CONTROL TYPE
光電スイッチ制御

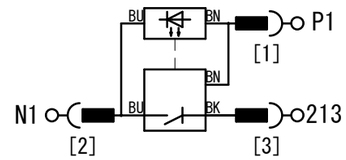


## LEVEL SWITCH OF NO.4 MATERIAL
## 二次No.4 レベルスイッチ

SL5 △1

LIMIT SWITCH CONTROL TYPE
リミット制御

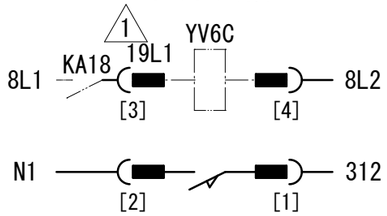


PADDLE LEVEL SWITCH CONTROL TYPE
レベル計制御

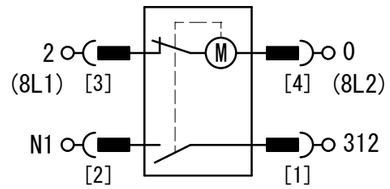


PROXIMITY SWITCH CONTROL TYPE
静電容量近接スイッチ制御

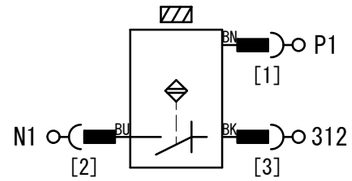


PHOTOELECTRIC SWITCH CONTROL TYPE
光電スイッチ制御

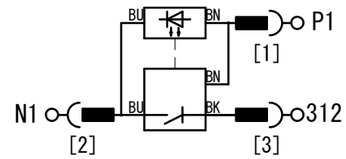


## LEVEL SWITCH OF NO.5 MATERIAL
## 二次No.5 レベルスイッチ

SL6 △1

LIMIT SWITCH CONTROL TYPE
リミット制御

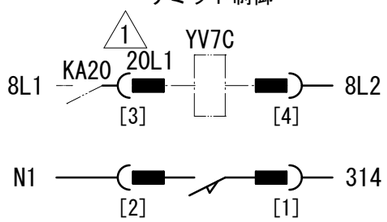


PADDLE LEVEL SWITCH CONTROL TYPE
レベル計制御

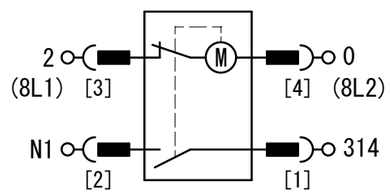


PROXIMITY SWITCH CONTROL TYPE
静電容量近接スイッチ制御

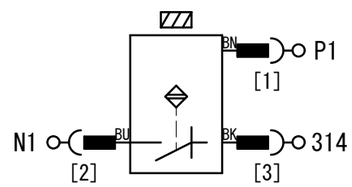


PHOTOELECTRIC SWITCH CONTROL TYPE
光電スイッチ制御

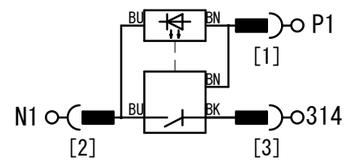


△1 Standard dwg.
標準図

| REVISION | | | | | |
|---|---|---|---|---|---|
| △ | | | | | |
| △ | | | | | |
| △ | | | | | |
| △1 | 2015/10/15 | ADD TO STANDARD DWG INDICATION/標準図表示追加<br>LINE NUMBER ADD AND MODIFICATION/線番修正・追加 | Y. ARAKI | Y. NAKAMURA | |
| MARK | DATE | CONTENTS | CHKD | APPD | |

| | | | |
|---|---|---|---|
| SCALE | — | CODE NO. | |
| APPROVED BY | Y. NAKAMURA | FORM | |
| DSGND (CHKD) BY | Y. YONEDA — | DATE | JUN. 14/2014 |
| DRAWN BY | — | UNIT mm | PLANE TRIGONOMETRY |

| NAME | DIRECTION OF NO.3-5 | DWG. NO. | B72173 |
|---|---|---|---|

MATSUI MFG. CO., LTD.

## SOURCE RESIN LOW
## 輸送元材料減
SL10

[ ]: CONTACT NUMBER

PADDLE LEVEL SWITCH CONTROL TYPE
レベル計制御

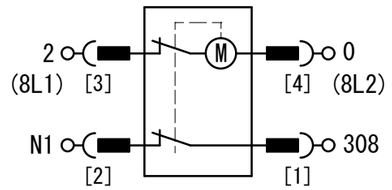


PROXIMITY SWITCH CONTROL TYPE
静電容量近接スイッチ制御

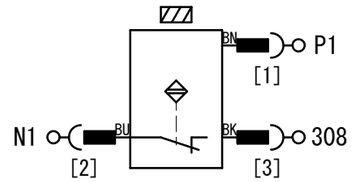


## HOPPER RESIN LOW
## 乾燥材料減
SL11

PADDLE LEVEL SWITCH CONTROL TYPE
レベル計制御

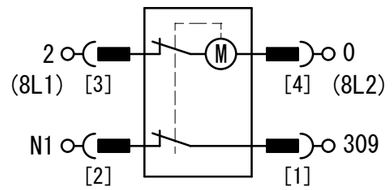


PROXIMITY SWITCH CONTROL TYPE
静電容量近接スイッチ制御

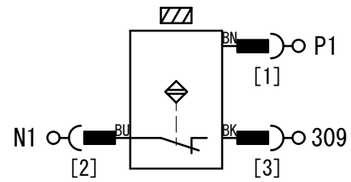


Standard dwg.
標準図

| REVISION | | | | | | | | | | |
|---|---|---|---|---|---|---|---|---|---|---|
| | | | | | SCALE | — | CODE NO. | | | |
| | | | | | APPROVED BY | | T. KINOSHITA | FORM | | |
| | | | | | DSGND (CHKD) BY | | K. SHIMIZU | DATE | MAR/03/2015 | |
| MARK | DATE | CONTENTS | CHKD | APPD | DRAWN BY | | K. ABE | UNIT mm | PLANE TRIGONOMETRY | |

| NAME | | DWG. NO. | B92385 |
|---|---|---|---|

MATSUI MFG. CO., LTD.

| ITEM NO. | DESCRIPTION | REQ. D | MATERIAL | REFERENCE |
|---|---|---|---|---|
| 1 | BRACKET<br>旧パネル取付ブラケット | 1 | SUS304 | t1.5 |

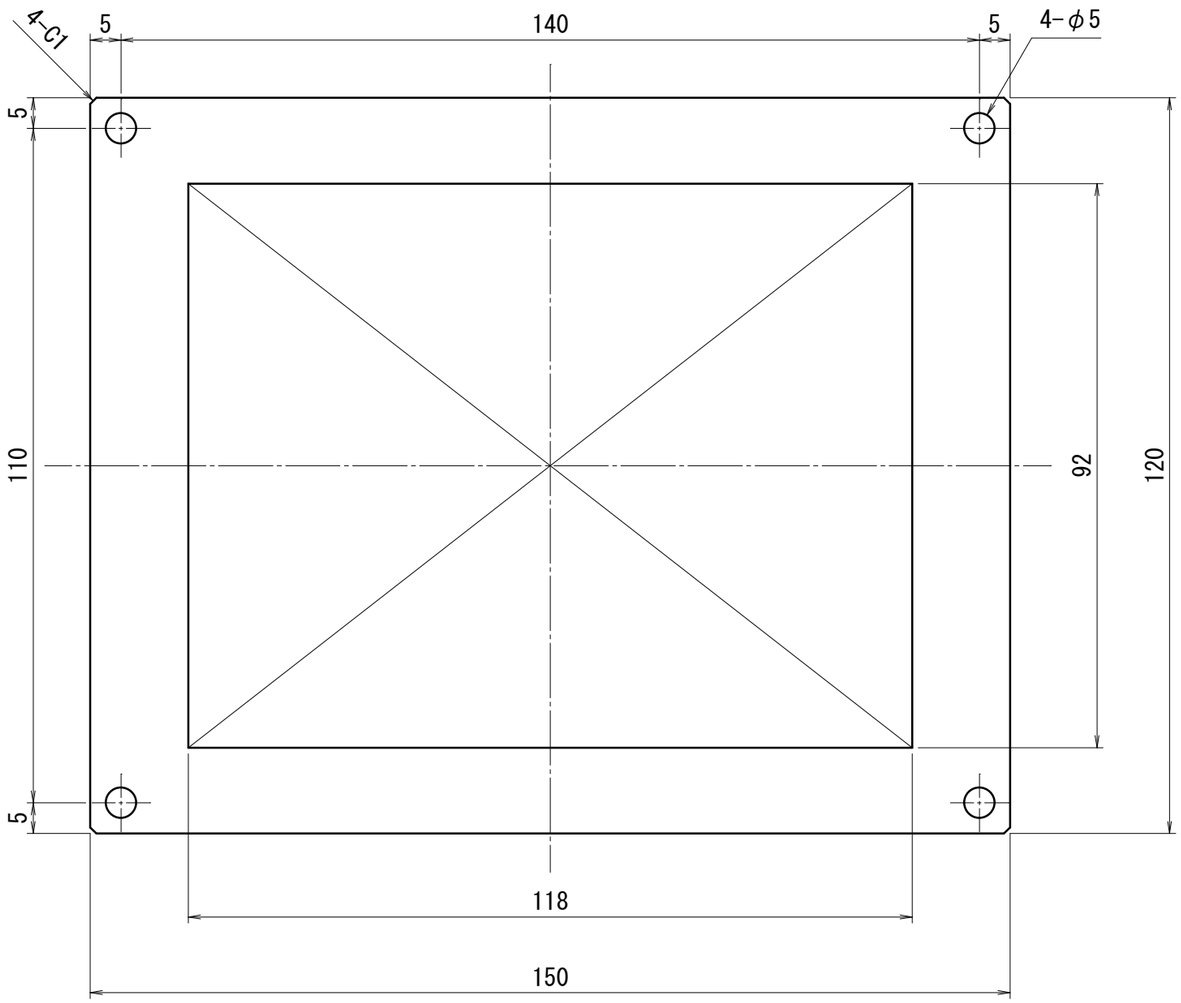


Old Panel (NV4W-MG21) Alteration Figure
旧パネル(NV4W-MG21)追加工図

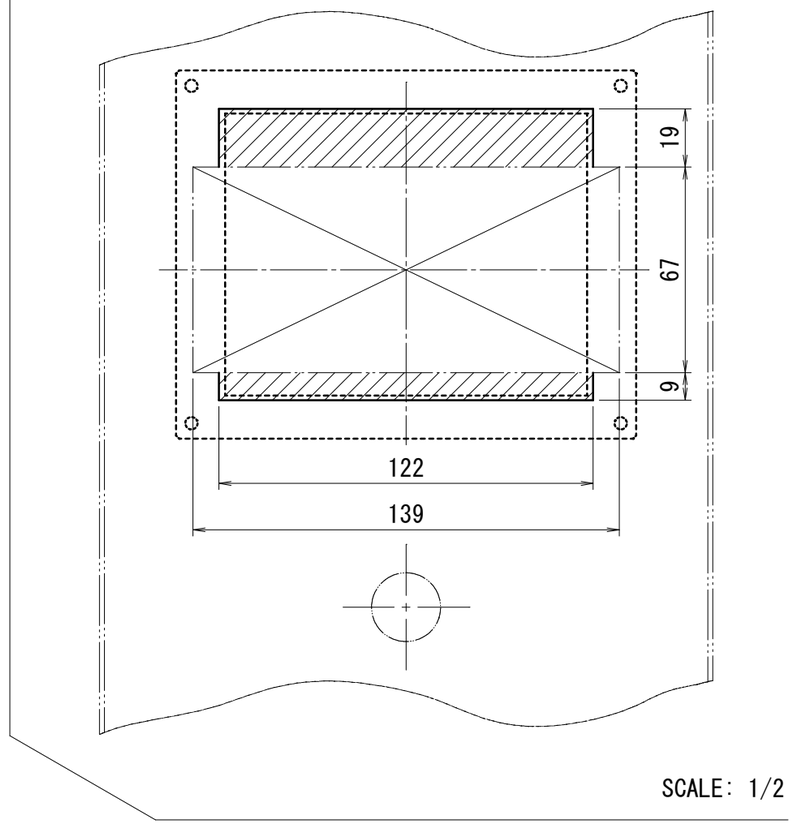


Standard dwg.
標準図

| REVISION | | | | | | | | | | | |
|---|---|---|---|---|---|---|---|---|---|---|---|
| | | | | | SCALE | 1/1 | CODE NO. | 700201 | | ュ | |
| | | | | | APPROVED BY | | S. YAMASHITA | FORM | | | |
| | | | | | DSGND (CHKD) BY | | Y. YONEDA — | DATE | DEC 15/2016 | | |
| MARK | DATE | CONTENTS | CHKD | APPD | DRAWN BY | | — | UNIT mm | PLANE TRIGONOMETRY | | |

| NAME | | DWG. NO. | D20622 |
|---|---|---|---|

MATSUI MFG. CO., LTD.